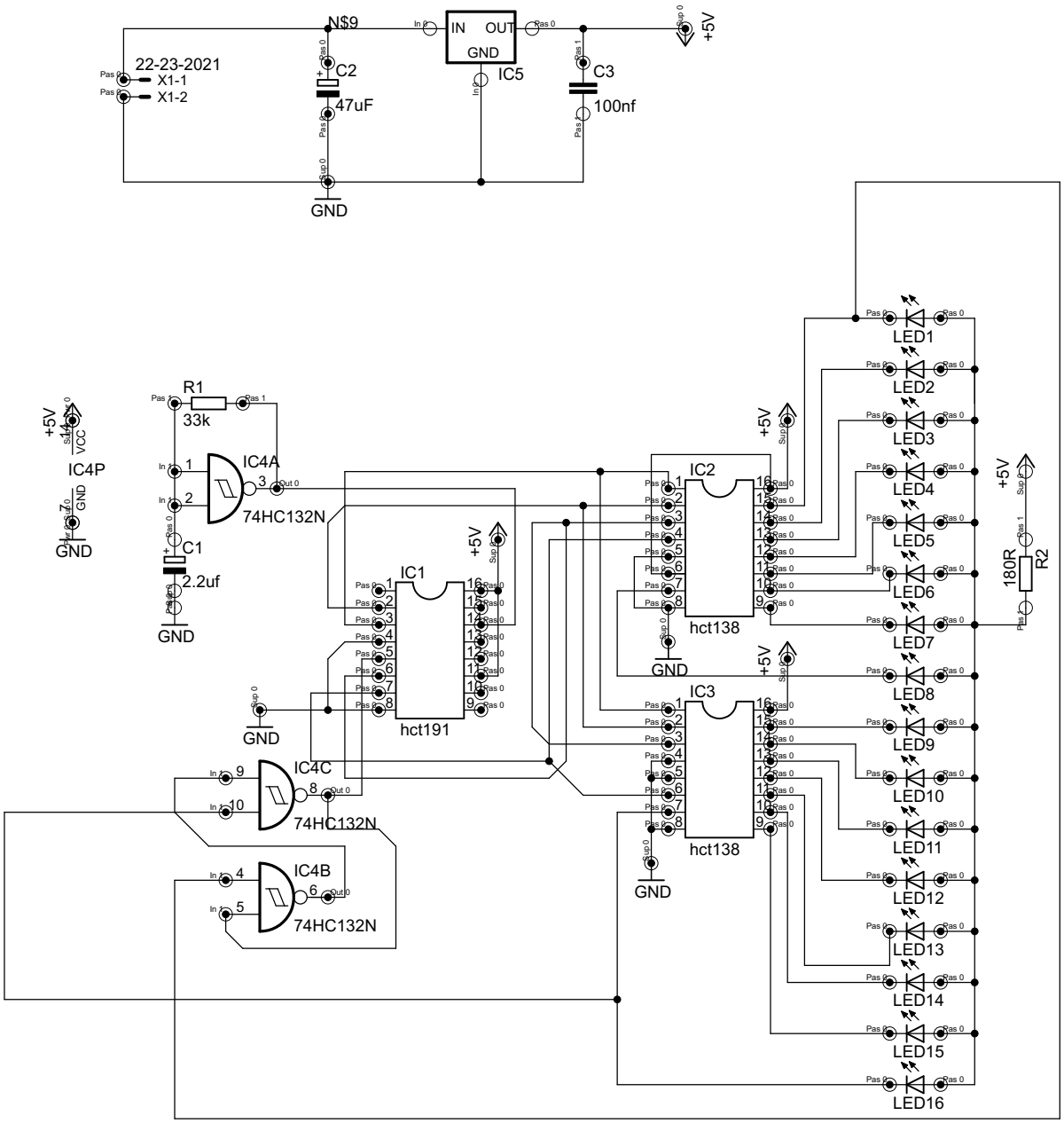

TITLE: krkit.	
Document Number:	REV:
Date: 2009.05.24. 13:47:55	Sheet: 1/1