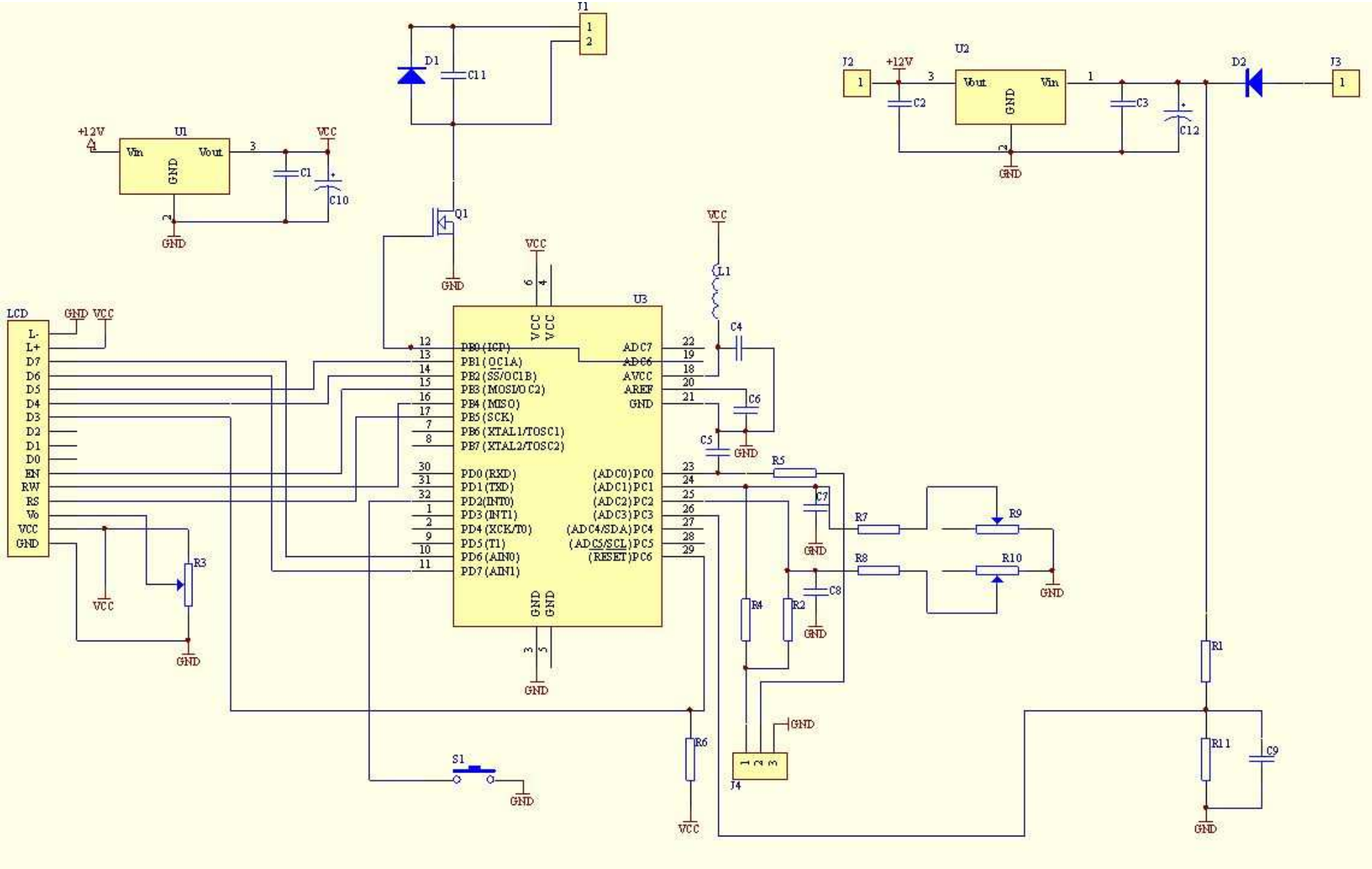
J1
D1
C11
+12V
U1
Vin
Vout
GND
VCC
C1
C10
Q1
U2
J2
C2
C3
C12
D2
J3
U3
LCD
L-
L+
D7
D6
D5
D4
D3
D2
D1
D0
EN
RW
RS
Vo
PB0(ICP)
PB1(OC1A)
PB2(SS/OC1B)
PB3(MOSI/OC2)
PB4(MISO)
PB5(SCK)
PB6(XTAL1/TOSC1)
PB7(XTAL2/TOSC2)
PD0(RXD)
PD1(TXD)
PD2(INT0)
PD3(INT1)
PD4(XCK/T0)
PD5(T1)
PD6(AIN0)
PD7(AIN1)
ADC7
ADC6
AVCC
AREF
(ADC0)PC0
(ADC1)PC1
(ADC2)PC2
(ADC3)PC3
(ADC4/SDA)PC4
(ADC5/SCL)PC5
(RESET)PC6
L1
C4
C5
C6
C7
C8
R1
R2
R3
R4
R5
R6
R7
R8
R9
R10
R11
C9
S1
J4