AmpegMK1 - Multisim - [AmpegMK1 *]

File Edit View Place MCU Simulate Transfer Tools Reports Options Window Help

Function Generator-XF...

Waveforms

Signal Options

Frequency	1	kHz
Duty Cycle	50	%
Amplitude	940	mVp
Offset	0	V

Set Rise/Fall Time

Common

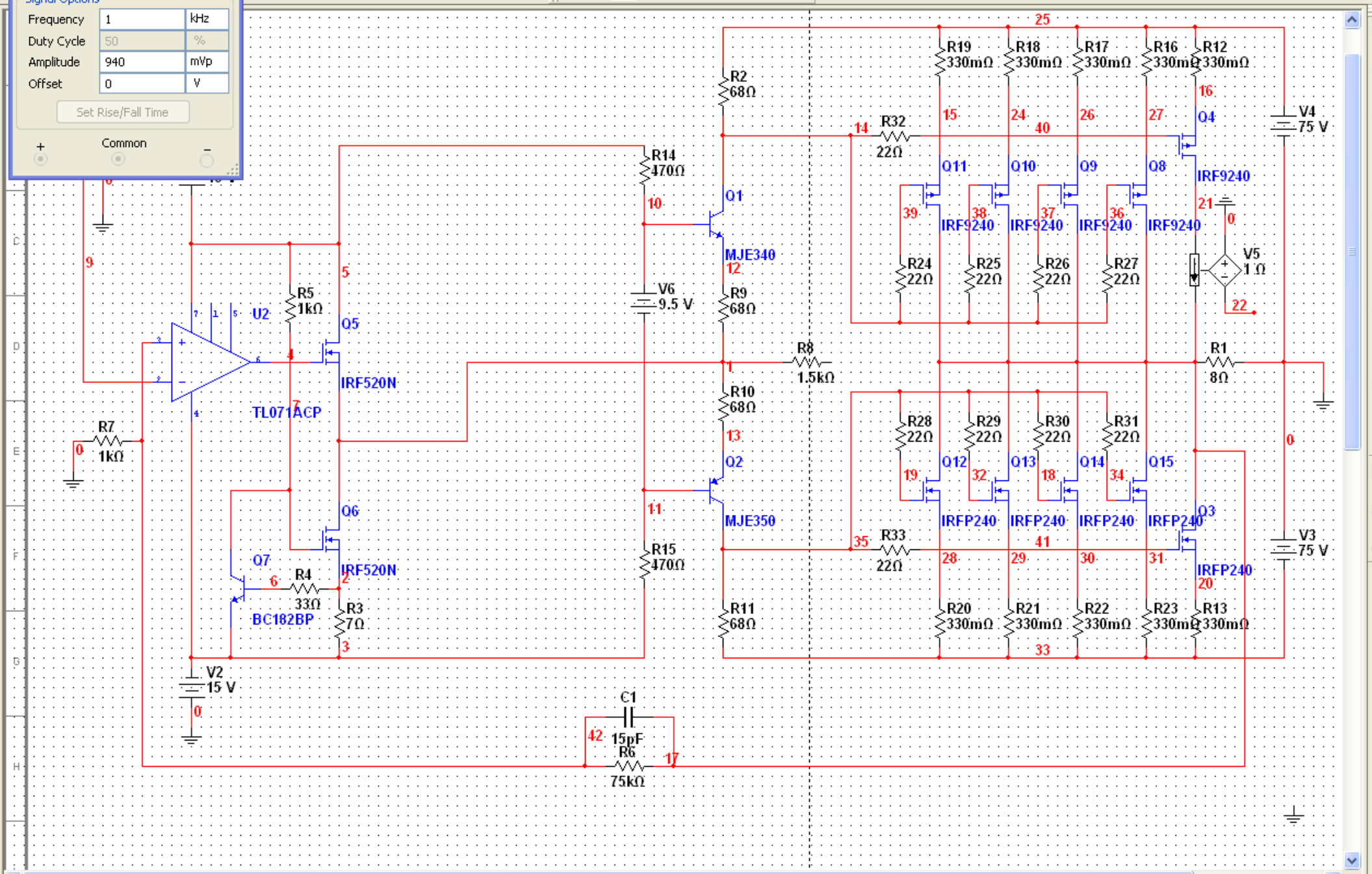

Circuit1 | Hangszín1 | AmpegMK1 *

Tran: 3.000 ms

start | Szexpartner szex sze... | [freemail] - Windows ... | Desktop | AmpegMK1 - Multisim ... | HU | 10:57