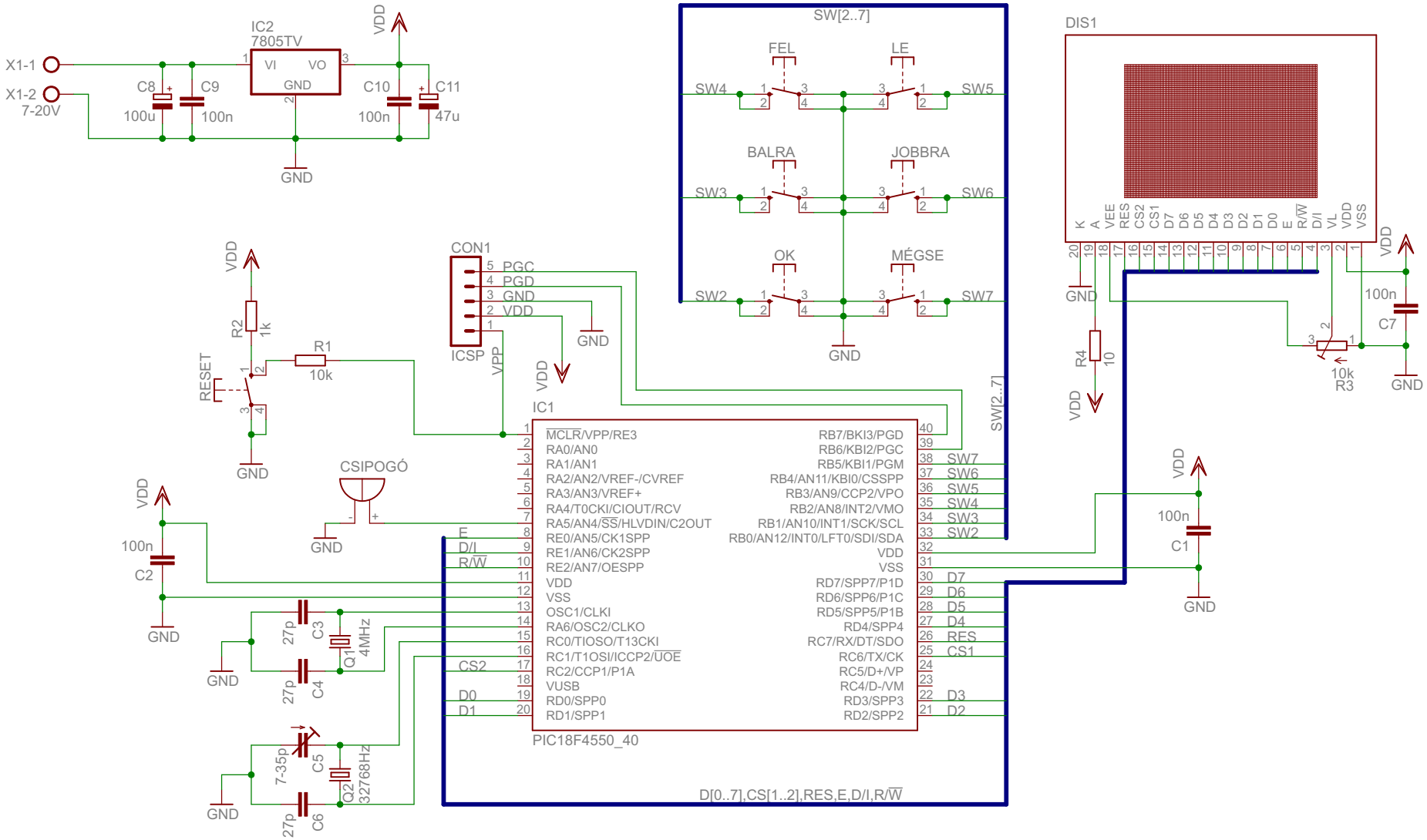
X1-1
X1-2
7-20V
IC2
7805TV
VI
VO
GND
C8
100u
C9
100n
C10
100n
C11
47u
VDD
GND
SW[2..7]
FEL
LE
BALRA
JOBBRA
OK
MÉGSE
SW2
SW3
SW4
SW5
SW6
SW7
DIS1
K
A
VEE
RES
CS2
CS1
D7
D6
D5
D4
D3
D2
D1
D0
E
R/W
D/I
VL
VDD
VSS
R4
10
R3
10k
C7
100n
CON1
PGC
PGD
GND
VDD
ICSP
VPP
R2
1k
R1
10k
RESET
CSIPOGÓ
IC1
MCLR/VPP/RE3
RA0/AN0
RA1/AN1
RA2/AN2/VREF-/CVREF
RA3/AN3/VREF+
RA4/T0CKI/CIOUT/RCV
RA5/AN4/SS/HLVDIN/C2OUT
RE0/AN5/CK1SPP
RE1/AN6/CK2SPP
RE2/AN7/OESPP
VDD
VSS
OSC1/CLKI
RA6/OSC2/CLKO
RC0/TIOSO/T13CKI
RC1/T1OSI/ICCP2/UOE
RC2/CCP1/P1A
VUSB
RD0/SPP0
RD1/SPP1
RB7/BKI3/PGD
RB6/KBI2/PGC
RB5/KBI1/PGM
RB4/AN11/KBI0/CSSPP
RB3/AN9/CCP2/VPO
RB2/AN8/INT2/VMO
RB1/AN10/INT1/SCK/SCL
RB0/AN12/INT0/LFT0/SDI/SDA
VDD
VSS
RD7/SPP7/P1D
RD6/SPP6/P1C
RD5/SPP5/P1B
RD4/SPP4
RC7/RX/DT/SDO
RC6/TX/CK
RC5/D+/VP
RC4/D-/VM
RD3/SPP3
RD2/SPP2
PIC18F4550_40
E
D/I
R/W
CS2
D0
D1
D7
D6
D5
D4
RES
CS1
D3
D2
C1
100n
C2
100n
C3
27p
C4
27p
Q1
4MHz
C5
7-35p
C6
27p
Q2
32768Hz
D[0..7],CS[1..2],RES,E,D/I,R/W