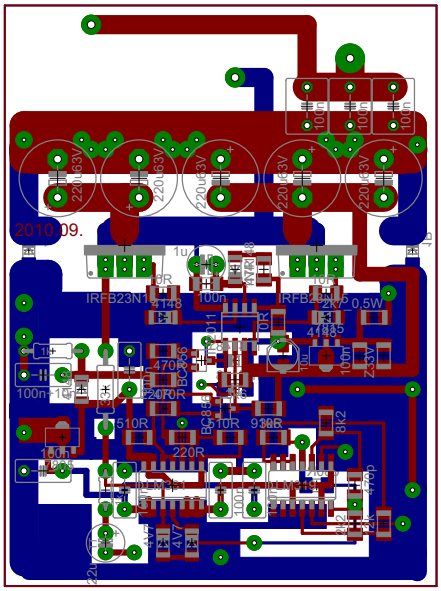
2010.09.
100n
220u 63V
1u
IRFB23N15
4148
470R
BC556
510R
220R
BC546
10R
930R
8k2
2k7 0.5W
4148
10k
100n
Z4V3
1N4148
4V7
4V7
100n
100n
100n