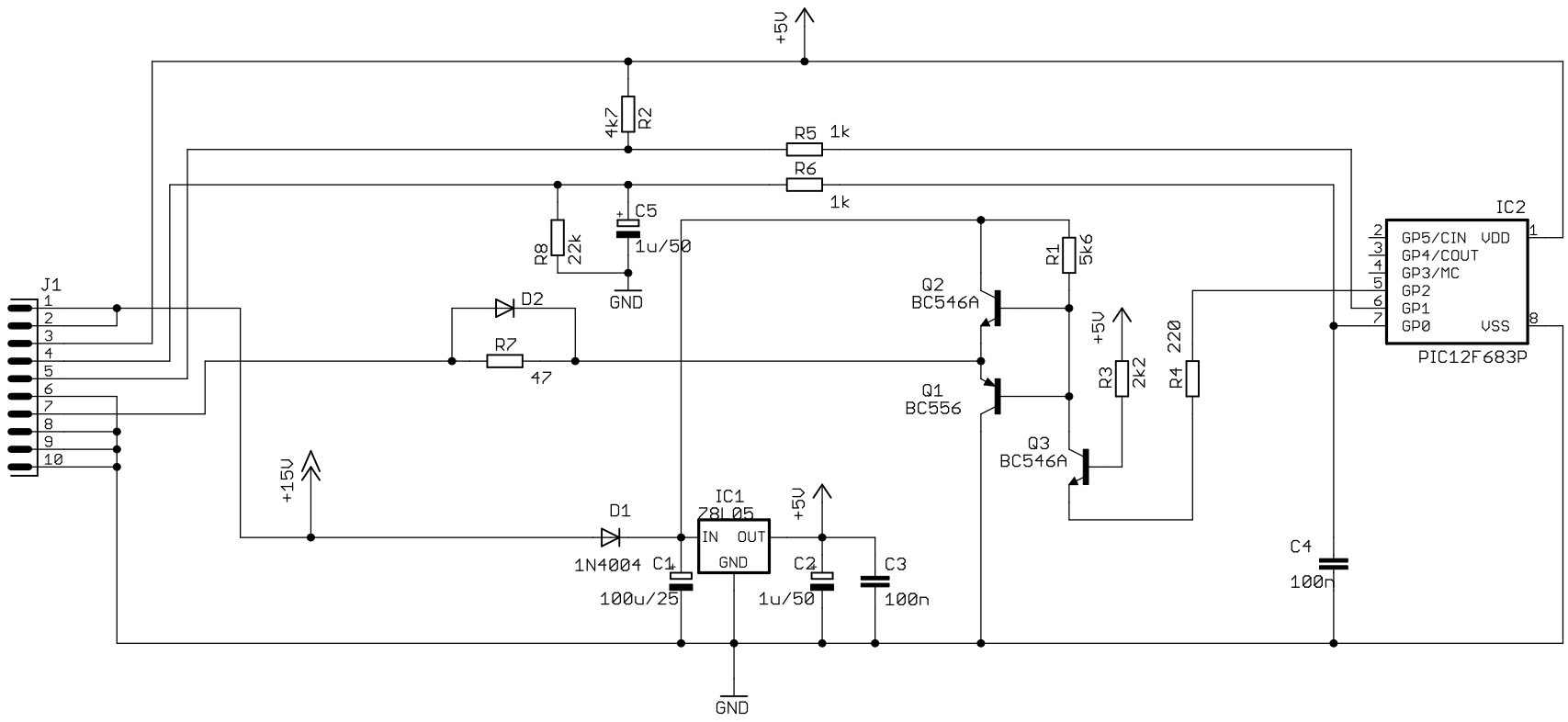

DV Electronics

TITLE: duroPWMs

Document Number: Duropor PWM Controller

REV:

Date: 22/05/2010 01:43:20 p.m.

Sheet: 1/1