BLUES BKR

Rev.1.Nov.22.2003

Build a Bluesbreaker work alike with true bypass on this layout. Off board components except for the potentiometers are not shown on the layout. Trademarks remain property of their owners.

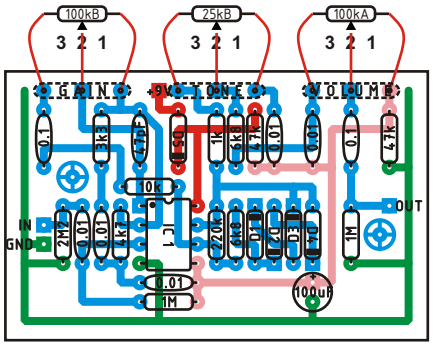

LAYOUT

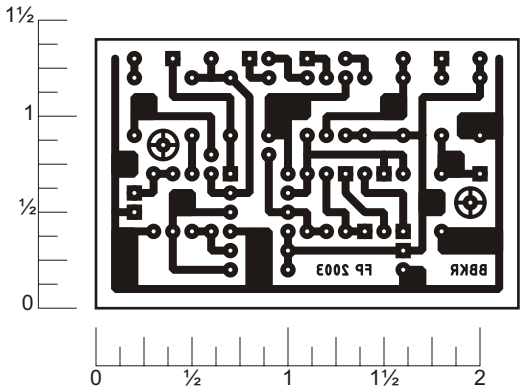

READY TO TRANSFER

Parts List

Resistors
- 1 - 1k
- 1 - 3.3k (3k3)
- 1 - 4.7k (4k7)
- 2 - 6.8k (6k8)
- 1 - 10k
- 2 - 47k
- 1 - 220k
- 2 - 1M
- 1 - 2.2M (2M2)

Pots
- 1 - 100k Lin
- 1 - 100k Log
- 1 - 25k Lin

Capacitors
- 1 - 100 µF
- 5 - 0.01 µF
- 2 - 0.1 µF
- 1 - 47 pF

Diodes
- D1 - 1N914
- D2 - 1N914
- D3 - 1N914
- D4 - 1N914
- D5 - 1N4001

IC's
- IC1 - TL072

Layout and presentation by Francisco Peña 2001 - 2003®.
All rights reserved. Authorization for personal use only,
any commercial use is forbidden.
Permission for posting/serving limited to
http://www.tonepad.com
Permission refused for posting from other sites.
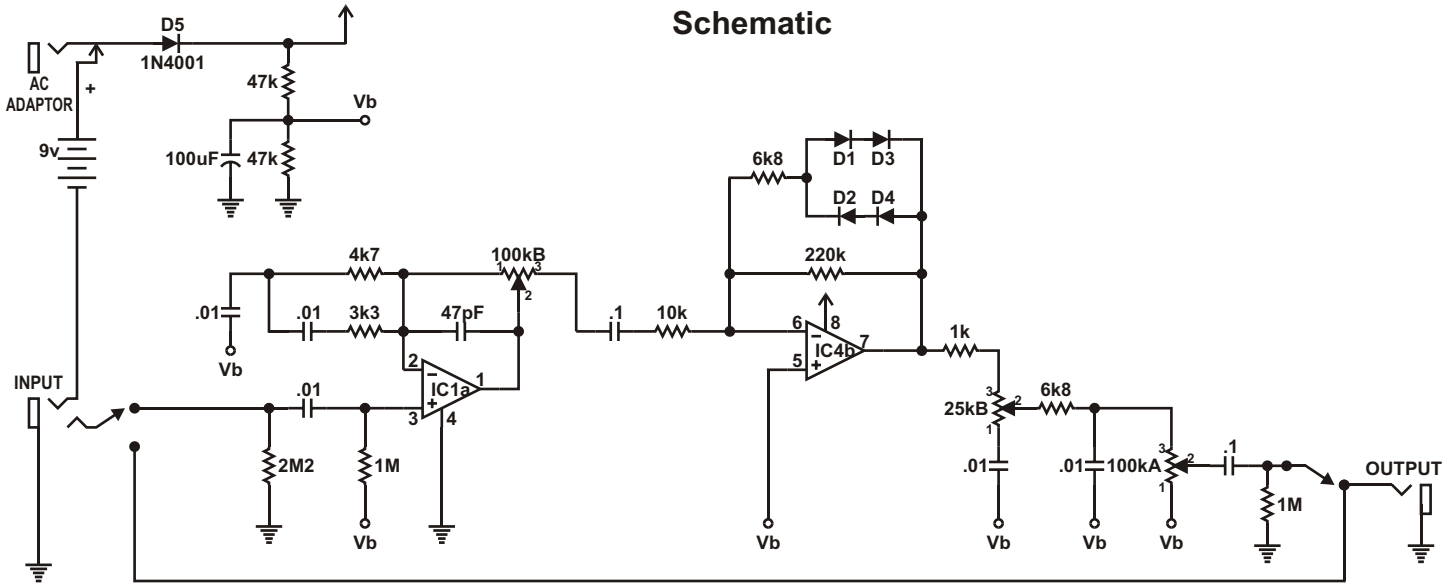
Schematic