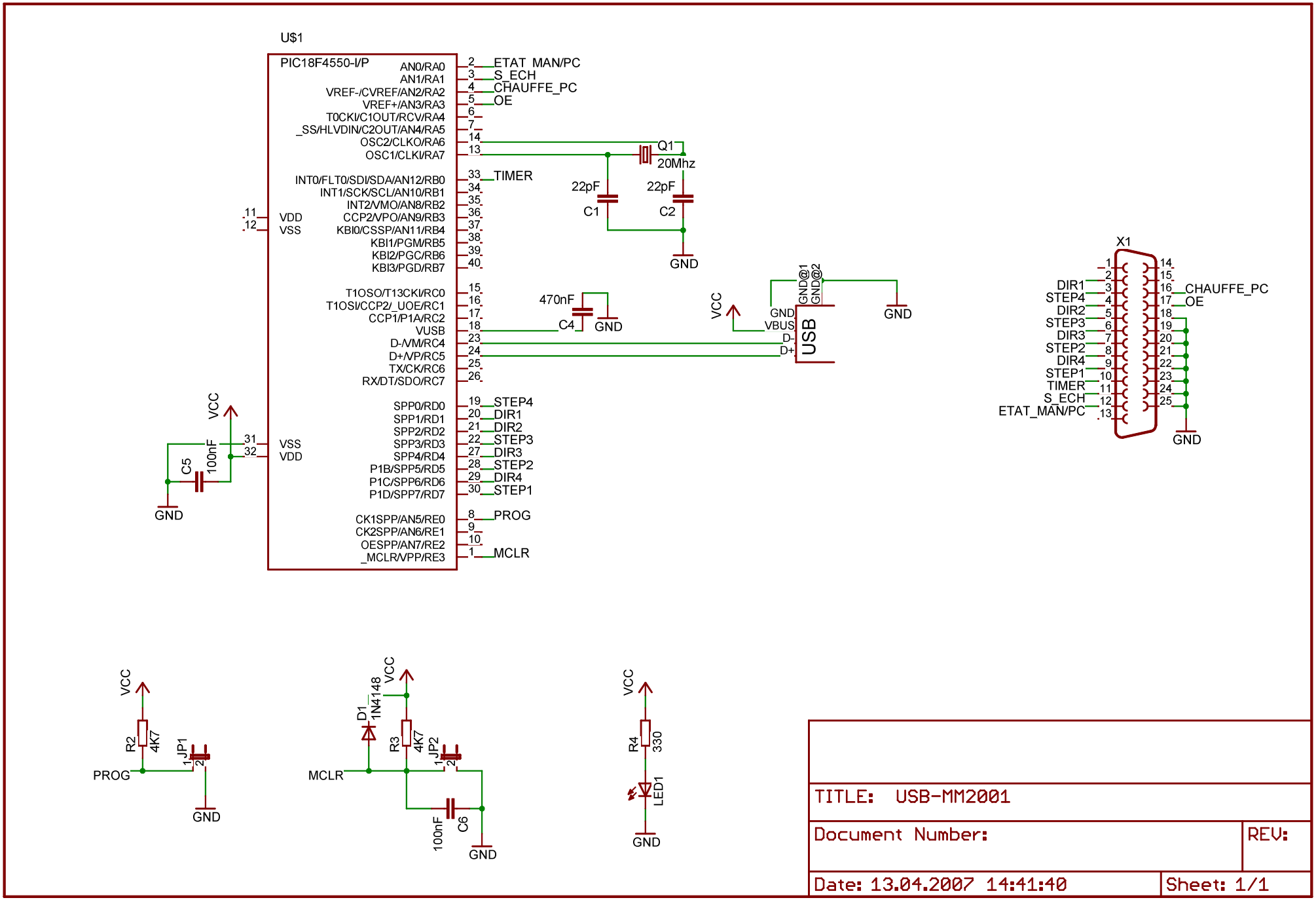
U$1
PIC18F4550-I/P
AN0/RA0
AN1/RA1
VREF-/CVREF/AN2/RA2
VREF+/AN3/RA3
T0CKI/C1OUT/RCV/RA4
_SS/HLVDIN/C2OUT/AN4/RA5
OSC2/CLKO/RA6
OSC1/CLKI/RA7
INT0/FLT0/SDI/SDA/AN12/RB0
INT1/SCK/SCL/AN10/RB1
INT2/VMO/AN8/RB2
CCP2/VPO/AN9/RB3
KBI0/CSSP/AN11/RB4
KBI1/PGM/RB5
KBI2/PGC/RB6
KBI3/PGD/RB7
T1OSO/T13CKI/RC0
T1OSI/CCP2/_UOE/RC1
CCP1/P1A/RC2
VUSB
D-/VM/RC4
D+/VP/RC5
TX/CK/RC6
RX/DT/SDO/RC7
SPP0/RD0
SPP1/RD1
SPP2/RD2
SPP3/RD3
SPP4/RD4
P1B/SPP5/RD5
P1C/SPP6/RD6
P1D/SPP7/RD7
CK1SPP/AN5/RE0
CK2SPP/AN6/RE1
OESPP/AN7/RE2
_MCLR/VPP/RE3
VDD
VSS
VSS
VDD
ETAT_MAN/PC
S_ECH
CHAUFFE_PC
OE
TIMER
STEP4
DIR1
DIR2
STEP3
DIR3
STEP2
DIR4
STEP1
PROG
MCLR
Q1
20Mhz
22pF
C1
22pF
C2
GND
470nF
C4
GND
VCC
GND
VBUS
D-
D+
USB
GND@1
GND@2
GND
X1
DIR1
STEP4
DIR2
STEP3
DIR3
STEP2
DIR4
STEP1
TIMER
S_ECH
ETAT_MAN/PC
CHAUFFE_PC
OE
GND
VCC
C5
100nF
GND
VCC
R2
4K7
JP1
PROG
GND
D1
1N4148
VCC
R3
4K7
JP2
MCLR
100nF
C6
GND
VCC
R4
330
LED1
GND
TITLE: USB-MM2001
Document Number:
REV:
Date: 13.04.2007 14:41:40
Sheet: 1/1