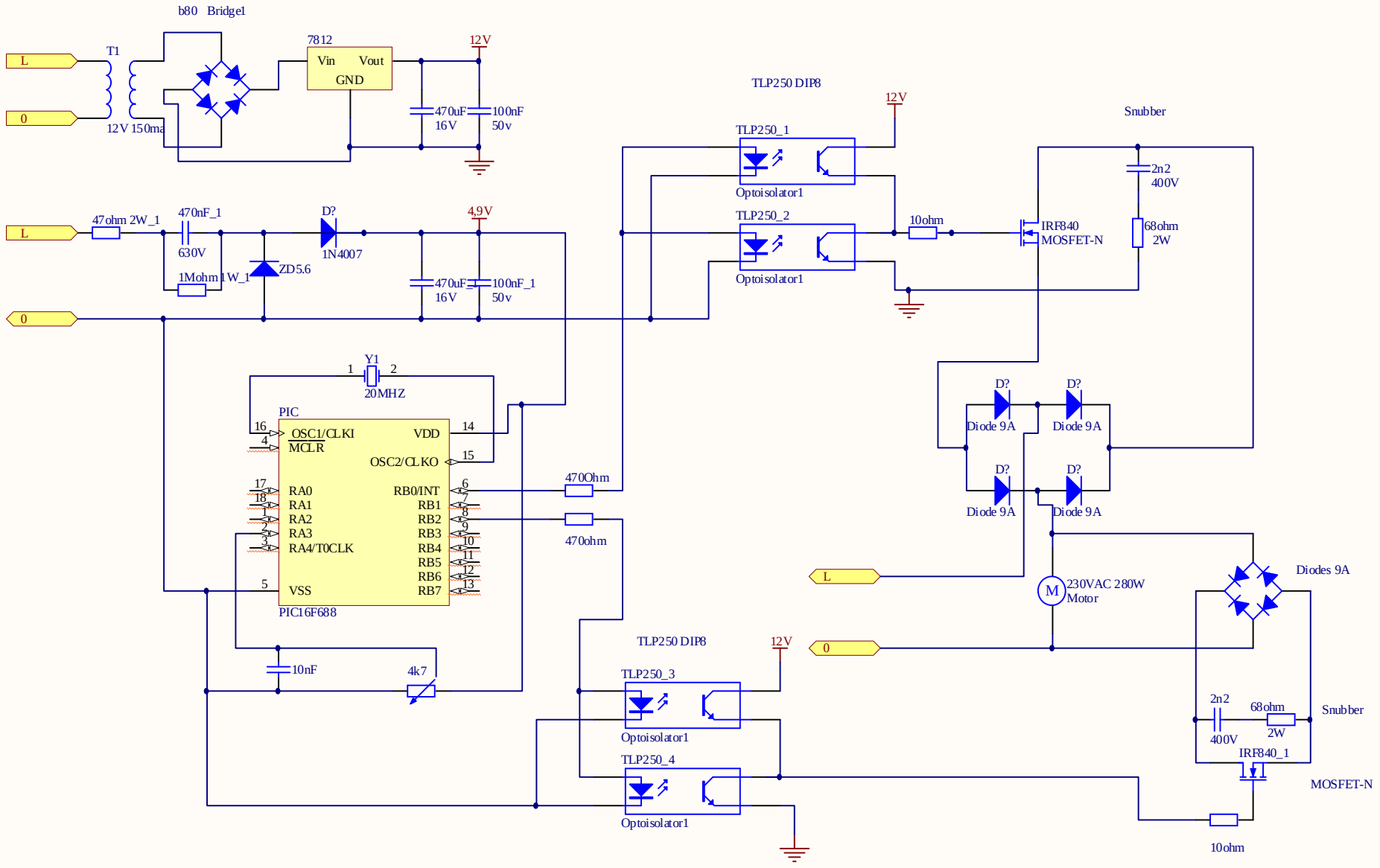

Title		
Size A4	Number	Revision
Date: 2011.01.23.		Sheet of
File: E:\utils\..\VENTVEZ.SCHDOC		Drawn By: