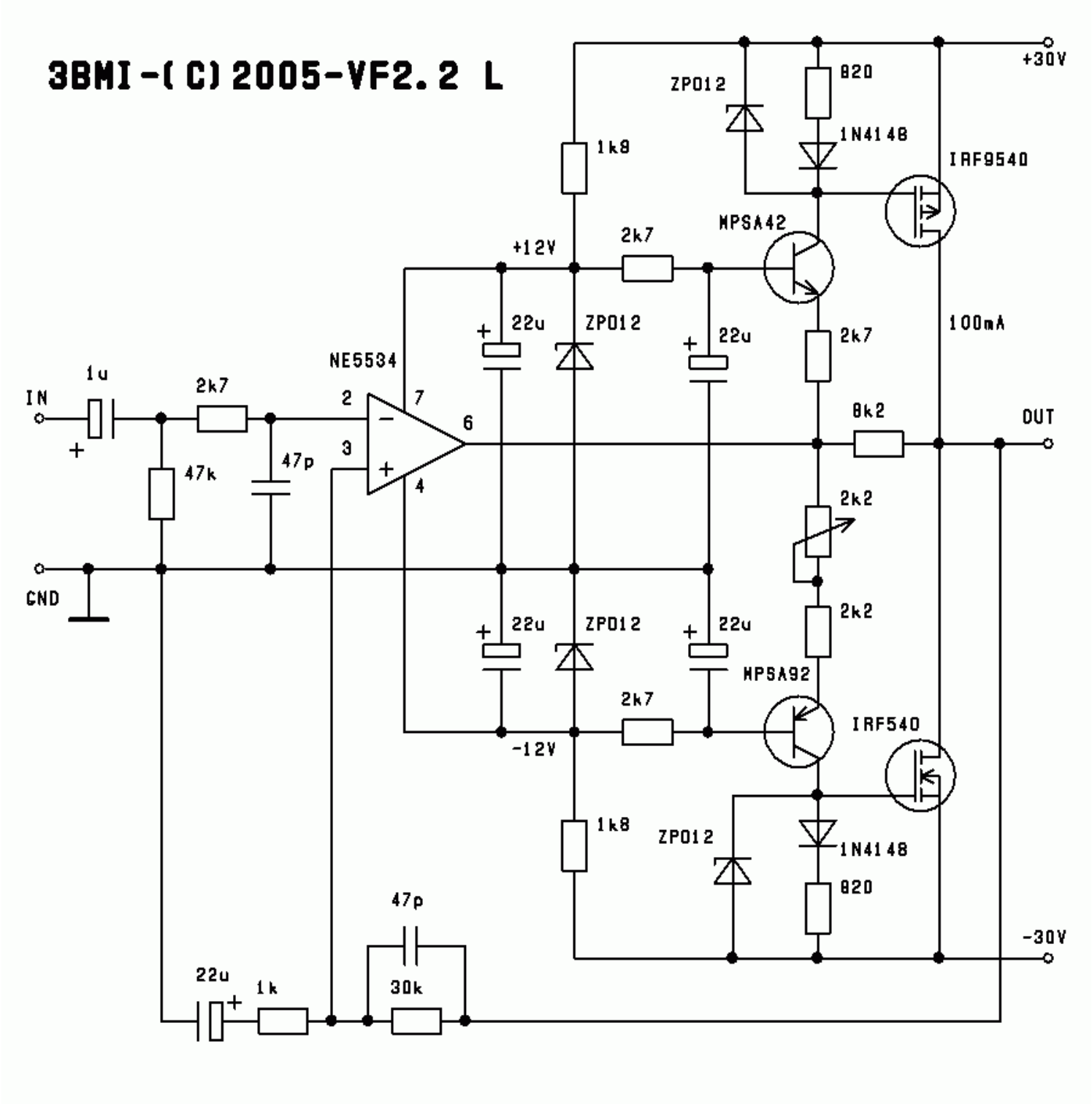
3BMI-(C)2005-VF2.2 L
+30V
ZP012
820
1N4148
IRF9540
1k8
MPSA42
2k7
+12V
22u
ZP012
22u
2k7
100mA
NE5534
1u
IN
2k7
2
7
6
8k2
OUT
3
4
47k
47p
2k2
GND
22u
ZP012
22u
2k2
MPSA92
2k7
IRF540
-12V
1k8
ZP012
1N4148
820
47p
-30V
22u
1k
30k

Г.5.5.1V
ВВМ 5006
OUT
IN
GND

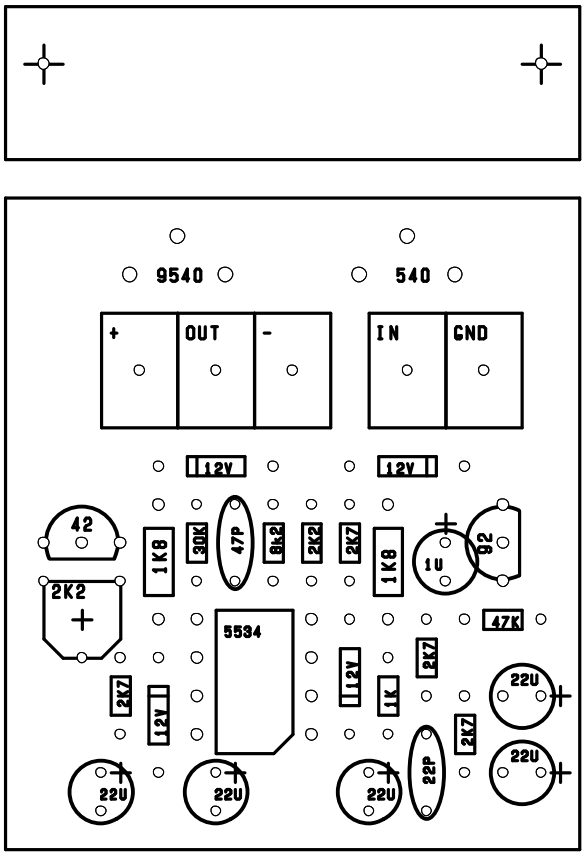
9540
540
+
OUT
-
IN
GND
12V
12V
42
1K8
30K
47P
8k2
2K2
2K7
1K8
1U
92
2K2
5534
47K
2K7
12V
1K
2K7
22U
2K7
12V
22U
22U
22U
22P
22U