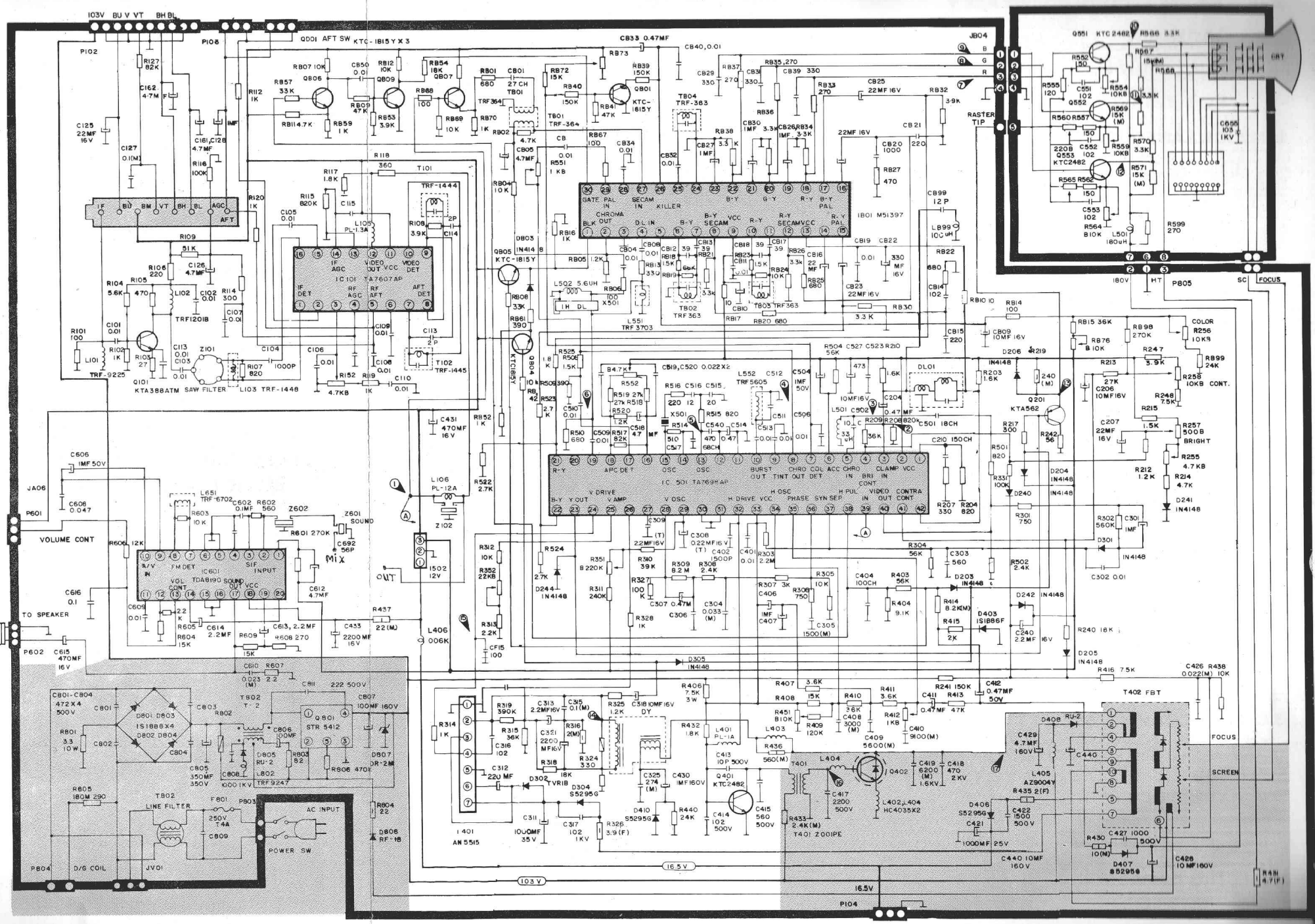
103V BU V VT BH BL
P102
P108
Q001 AFT SW KTC-1815 Y X 3
CB33 0.47MF
CB40, 0.01
JB04
RASTER TIP
CRT
Q551 KTC 2482
Q552
Q553 KTC2482
180V
HT
P805
SC
FOCUS
IC101 TA7607AP
IC 501 TA7698AP
IC601 TDA8190
IC 1401 M51397
TRF-9225
Q101 KTA388ATM SAW FILTER
L103 TRF-1448
TRF1201B
TRF-1444
TRF-1445
TRF-1414
TRF-363
TRF-364
TRF-3703
TRF5605
TRF-6702
TRF9247
X501
1H DL
VOLUME CONT
TO SPEAKER
P601
P602
JA06
Z601 SOUND
Z602
Mix
OUT
Q801 KTC-1815Y
Q805 KTC-1815Y
Q806 KTC1815Y
Q401 KTC2482
Q201 KTA562
Q402 HC4035X2
L401 PL-1A
L404 AZ9004Y
T401 Z001PE
T402 FBT
STR 5412
T802 LINE FILTER
F801 250V T-4A
P803
AC INPUT
POWER SW
P804
D/G COIL
JV01
P104
16.5V
103V
FOCUS
SCREEN

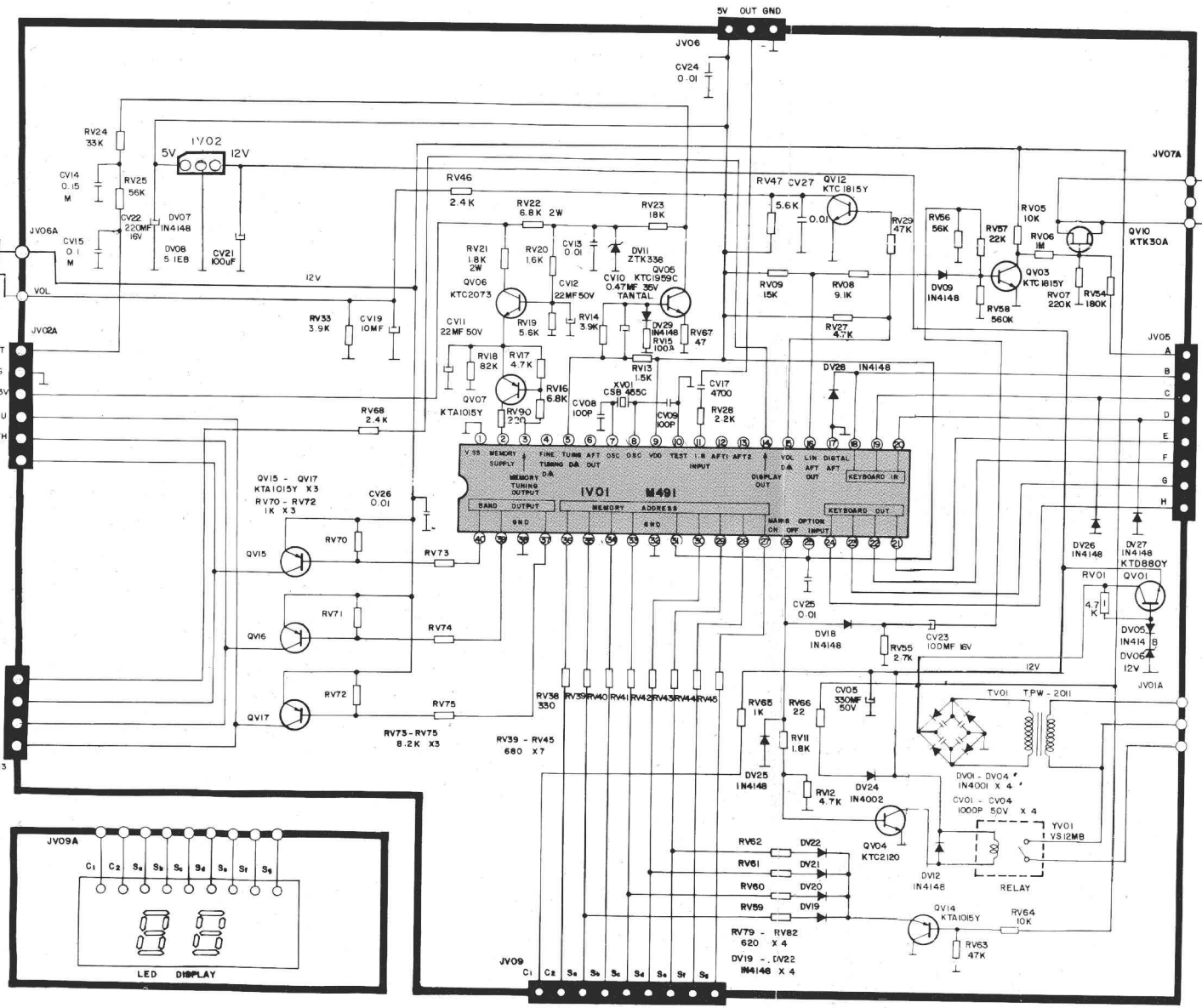
5V OUT GND
JV06
CV24 0.01
RV24 33K
CV14 0.15 M
RV25 56K
CV22 220MF 16V
DV07 IN4148
DV08 5.1EB
CV21 100uF
IY02
5V
12V
P601
JV06A
CV15 0.1 M
VOL
12V
RV46 2.4K
RV22 6.8K 2W
RV23 18K
RV21 1.8K 2W
RV20 1.6K
CV13 0.01
DV11 ZTK338
CV10 0.47MF 35V TANTAL
QV05 KTC1959C
QV06 KTC2073
CV12 22MF 50V
RV19 5.6K
RV14 3.9K
DV29 IN4148
RV15 100Ω
RV67 47
RV33 3.9K
CV19 10MF
CV11 22MF 50V
RV18 82K
RV17 4.7K
QV07 KTA1015Y
RV16 6.8K
RV90 220
RV13 1.5K
XV01 CSB 455C
CV08 100P
CV09 100P
CV17 4700
RV28 2.2K
RV68 2.4K
JV02A
VT
G
103V
BU
VH
VL
QV15 - QV17 KTA1015Y X3
RV70 - RV72 1K X3
CV26 0.01
QV15
QV16
QV17
RV70
RV71
RV72
RV73
RV74
RV75
RV73 - RV75 8.2K X3
RV39 - RV45 680 X7
RV38 330
RV39
RV40
RV41
RV42
RV43
RV44
RV45
IV01 M491
VSS MEMORY SUPPLY
FINE TUNING D/A
TUNING D/A OUT
AFT OUT
OSC
OSC
VDD
TEST
I.F. INPUT
AFT1
AFT2
VOL D/A
DISPLAY OUT
LIN. AFT OUT
DIGITAL AFT
KEYBOARD IN
MEMORY TUNING OUTPUT
BAND OUTPUT
MEMORY ADDRESS
KEYBOARD OUT
GND
GND
MAINS ON OFF
OPTION INPUT
RV47 5.6K
CV27 0.01
QV12 KTC1815Y
RV29 47K
RV09 15K
RV08 9.1K
RV27 4.7K
DV28 IN4148
RV56 56K
RV57 22K
RV05 10K
RV06 1M
QV03 KTC1815Y
RV07 220K
RV54 180K
RV58 560K
DV09 IN4148
QV10 KTK30A
JV07A
JV07
JV05
A
B
C
D
E
F
G
H
DV26 IN4148
DV27 IN4148
KTD880Y
RV01
QV01
4.7K
DV05 IN4148
DV06
12V
JV01A
CV25 0.01
DV18 IN4148
CV23 100MF 16V
RV55 2.7K
12V
TV01 TPW-2011
CV05 330MF 50V
RV65 1K
RV66 22
RV11 1.8K
DV25 IN4148
RV12 4.7K
DV24 IN4002
DV01 - DV04 IN4001 X 4
CV01 - CV04 1000P 50V X 4
YV01 VS12MB
QV04 KTC2120
DV12 IN4148
RELAY
RV62
RV61
RV60
RV59
DV22
DV21
DV20
DV19
RV79 - RV82 620 X 4
DV19 - DV22 IN4148 X 4
QV14 KTA1015Y
RV64 10K
RV63 47K
JV09
C1 C2 Sa Sb Sc Sd Se Sf Sg
JV09A
C1 C2 Sa Sb Sc Sd Se Sf Sg
LED DISPLAY

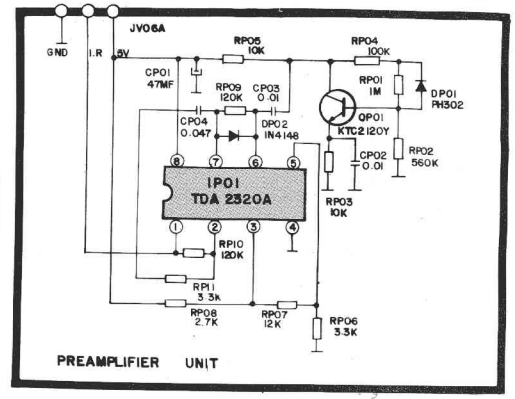
JV06A
GND
I.R
5V
RP05 10K
RP04 100K
CP01 47MF
RP09 120K
CP03 0.01
RP01 1M
DP01 RH302
CP04 0.047
DP02 IN4148
QP01 KTC2120Y
CP02 0.01
RP02 560K
IP01 TDA 2320A
RP03 10K
RP10 120K
RP11 3.3K
RP08 2.7K
RP07 12K
RP06 3.3K
PREAMPLIFIER UNIT

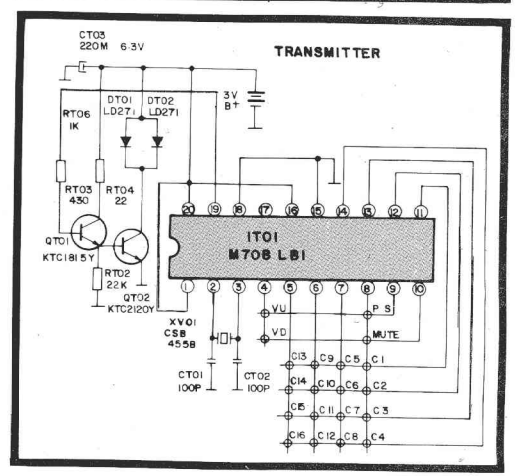
TRANSMITTER
CT03 220M 6.3V
3V B+
DT01 LD271
DT02 LD271
RT06 1K
RT03 430
RT04 22
QT01 KTC1815Y
RT02 22K
QT02 KTC2120Y
IT01 M706 LBI
VU
P S
VD
MUTE
XV01 CSB 455B
CT01 100P
CT02 100P
C1
C2
C3
C4
C5
C6
C7
C8
C9
C10
C11
C12
C13
C14
C15
C16

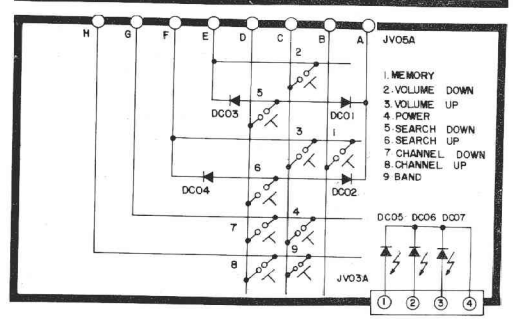
JV05A
H G F E D C B A
1. MEMORY
2. VOLUME DOWN
3. VOLUME UP
4. POWER
5. SEARCH DOWN
6. SEARCH UP
7. CHANNEL DOWN
8. CHANNEL UP
9. BAND
DC01
DC02
DC03
DC04
DC05 DC06 DC07
JV03A