Service Sheet of MC-74A (2/2)

PART NO : 3854VA0018A-S2
DATE : Nov 24 ,'97

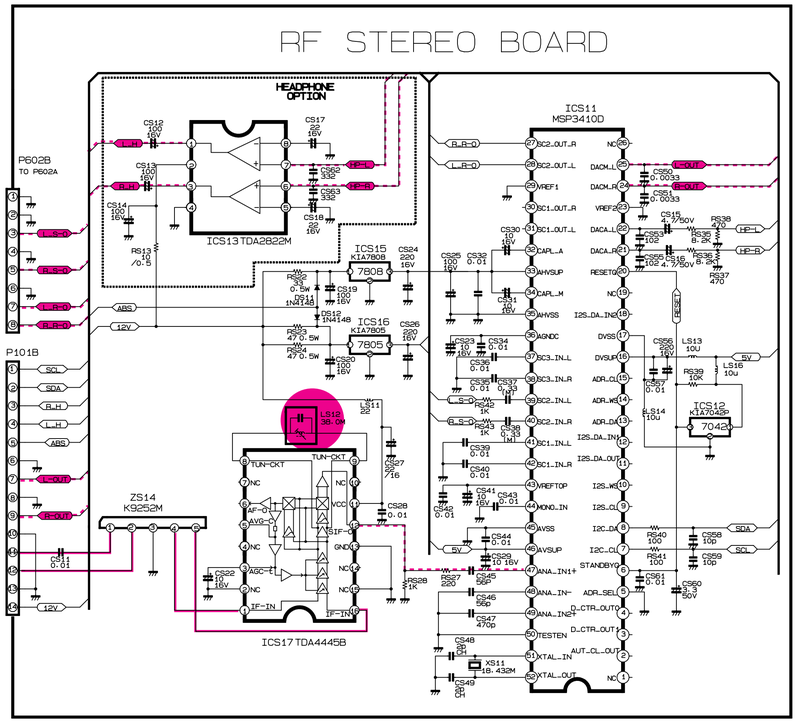

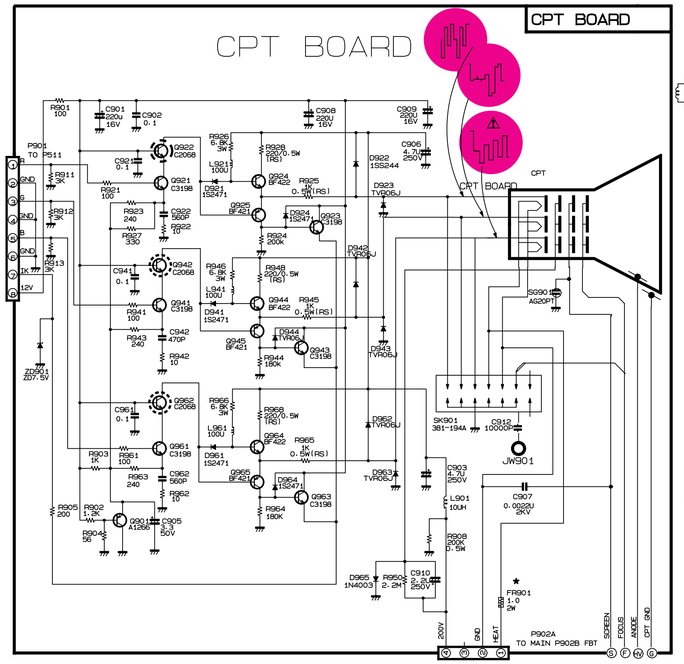

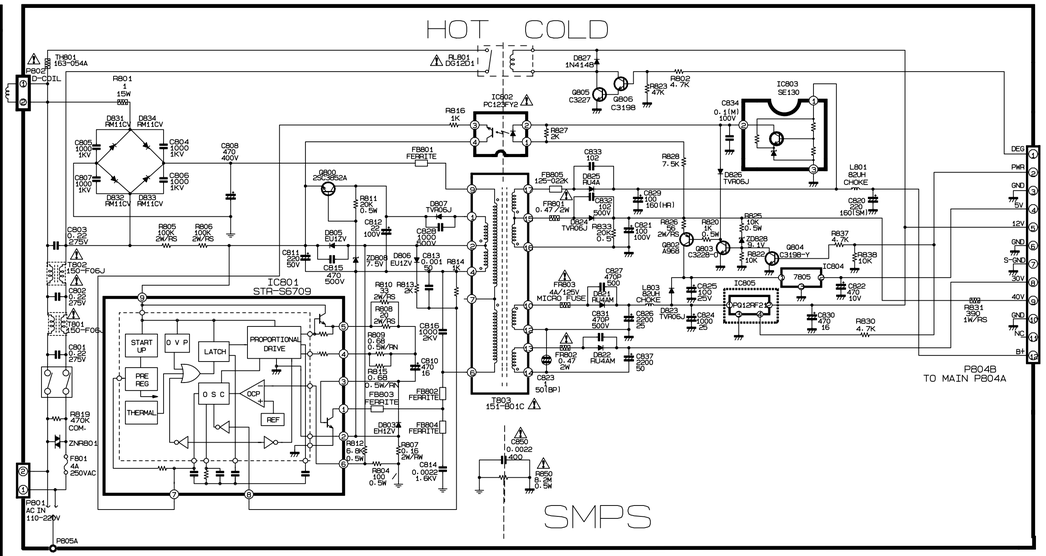

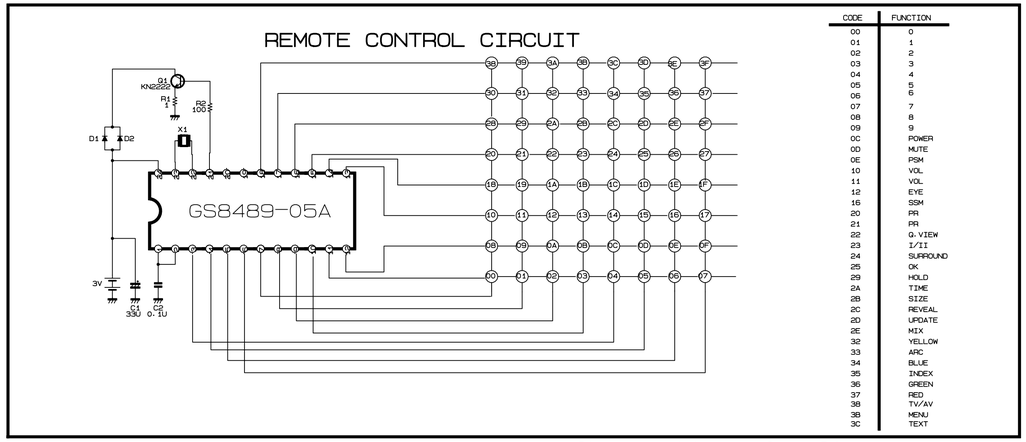

CODE	FUNCTION
00	0
01	1
02	2
03	3
04	4
05	5
06	6
07	7
08	8
09	9
0C	POWER
0D	MUTE
0E	PSM
10	VOL
11	VOL
12	EYE
16	SSM
20	PR
21	PR
22	Q.VIEW
23	I/II
24	SURROUND
25	OK
29	HOLD
2A	TIME
2B	SIZE
2C	REVEAL
20	UPDATE
2E	MIX
32	YELLOW
33	ARC
34	BLUE
35	INDEX
36	GREEN
37	RED
38	TV/AV
3B	MENU
3C	TEXT

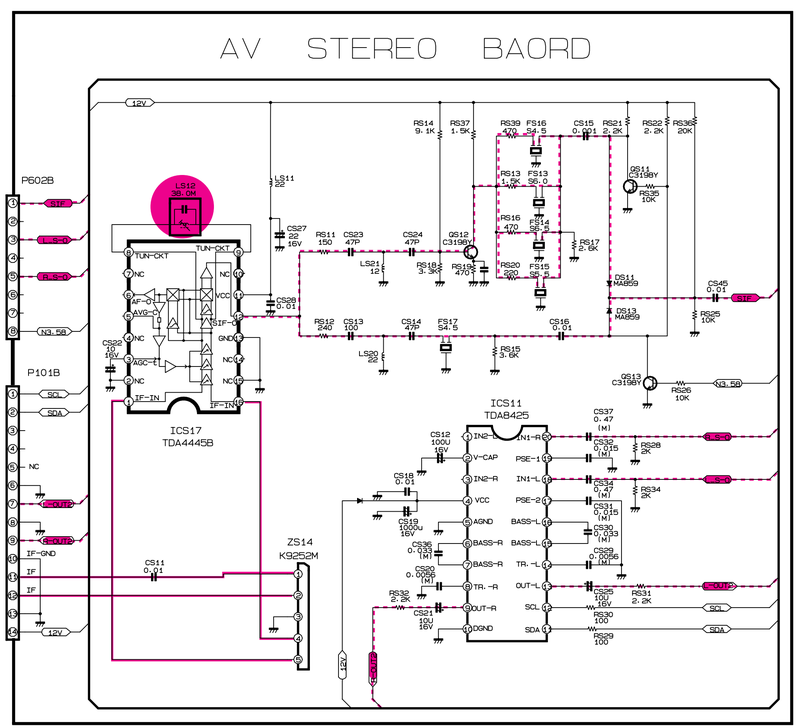

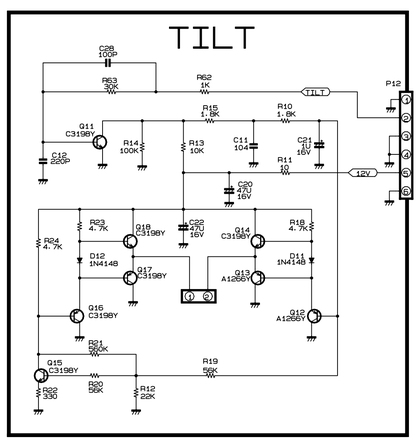

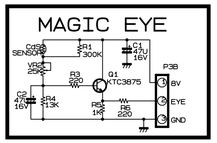

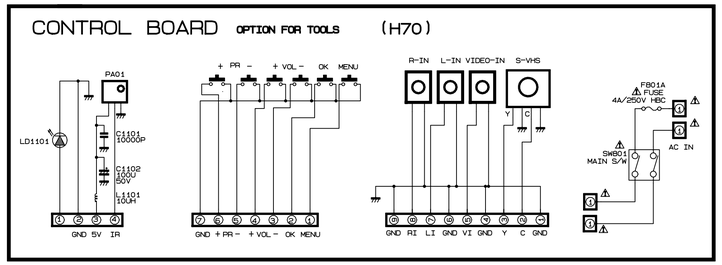

NOTICE

Since this is basic circuit diagram. The value of components and some partial connection are subject to change for improvement without notice.

The components marked ⚠ conform to VDE or IEC guide-lines and are essential for safe operation of the TV receiver.
While those marked ⚠ are required for correct operation.
Use specified parts only when replacing.

Value of resistor, capacitor and inductor

1. Resistances are shown in ohm. K=1,000. M=1,000,000.
2. Unless otherwise noted in schematic. All capacitor values less than 1 are expressed in mfd and the values more than 1 in pF.
3. Unless otherwise noted in schematic. all inductor values more than 1 are expressed in uH and the values less than 1 in Henry(H).

Observation of voltages and waveforms

1. Voltages read with VTVM from point to chassis ground. line voltage is 230+/-20% volts. signal pattern is colour-bar.
2. The schematic shown is represetative only.
3. All waveforms are taken using a wide band oscilloscope and a low capacity probe.
4. Check FINE TUNING, AGC, CONTRAST, BRIGHTNESS and COLOUR controls for best picture. make sure that COLOUR and BRIGHTNESS are in mid-point and CONTRAST is in 75%.
5. Waveforms are taken using a standard colour signal.

★ INCH CONVERSION PARTS

CIR.-NO	25INCH	28INCH	29INCH