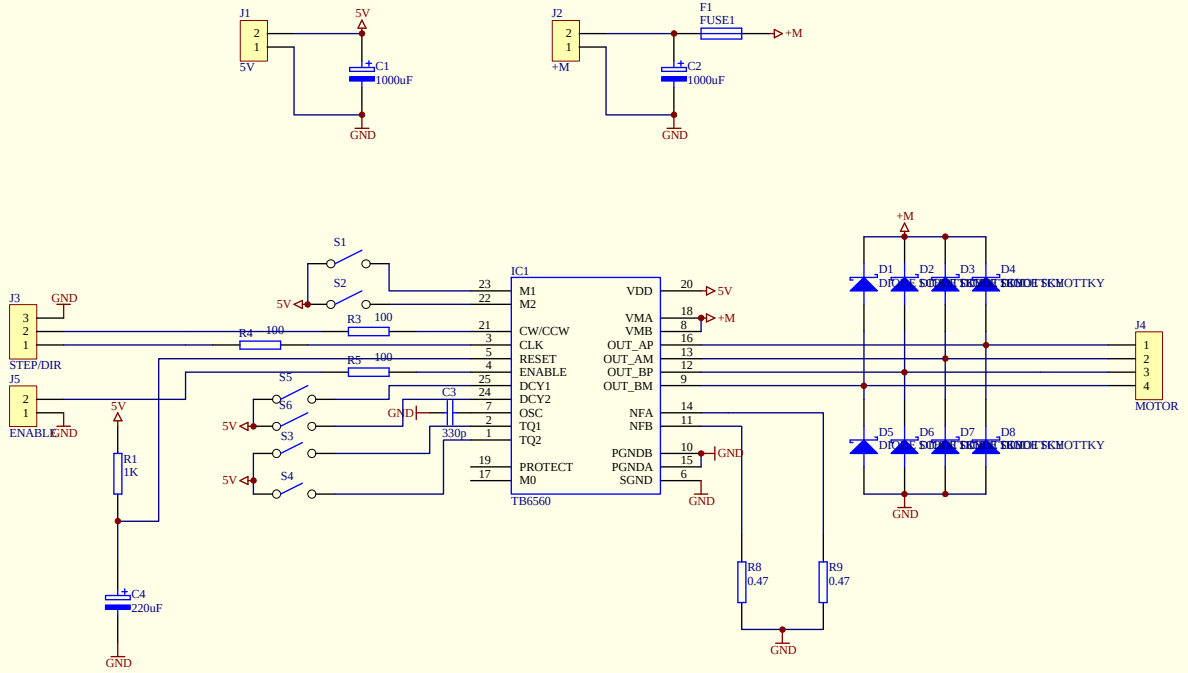

Title		
Size B	Number	Revision
Date: 25-Sep-2011	Sheet of	
File: D:\!aktuell\stepper\stepper\stepper.Ddb	Drawn By:	