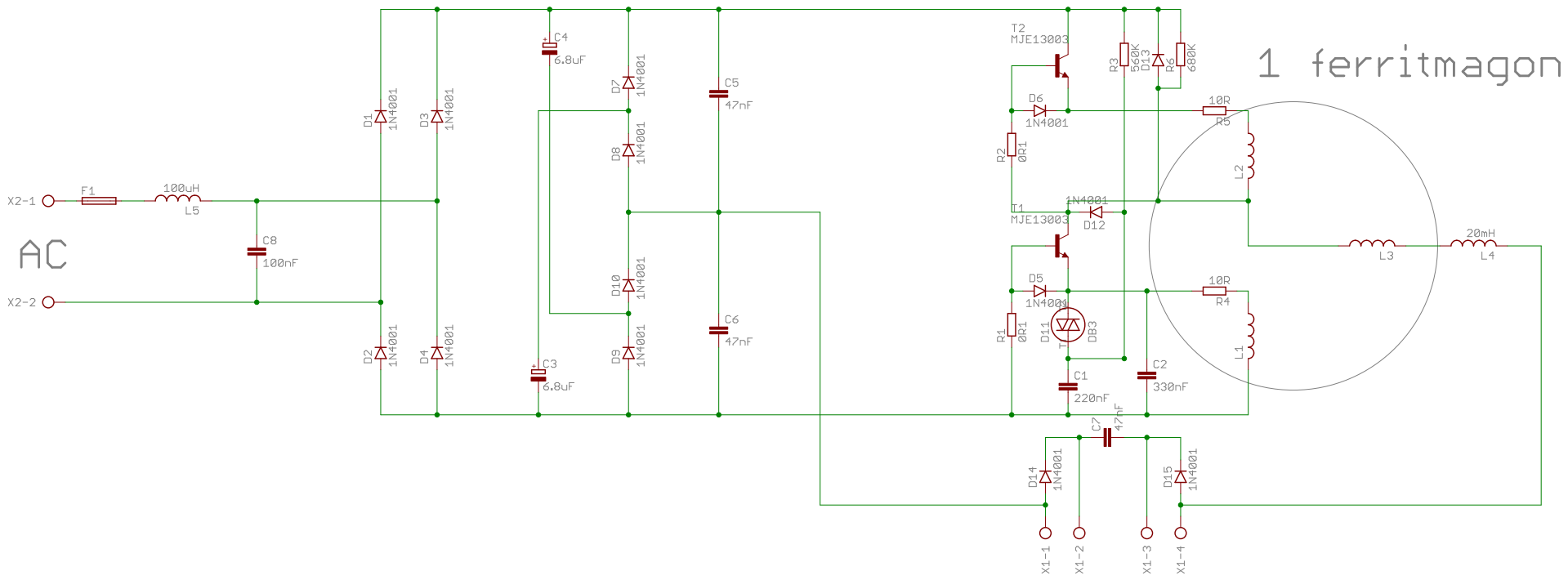

TITLE: lamp	
Document Number:	REV:
Date: 2011.10.17. 19:22	Sheet: 1/1