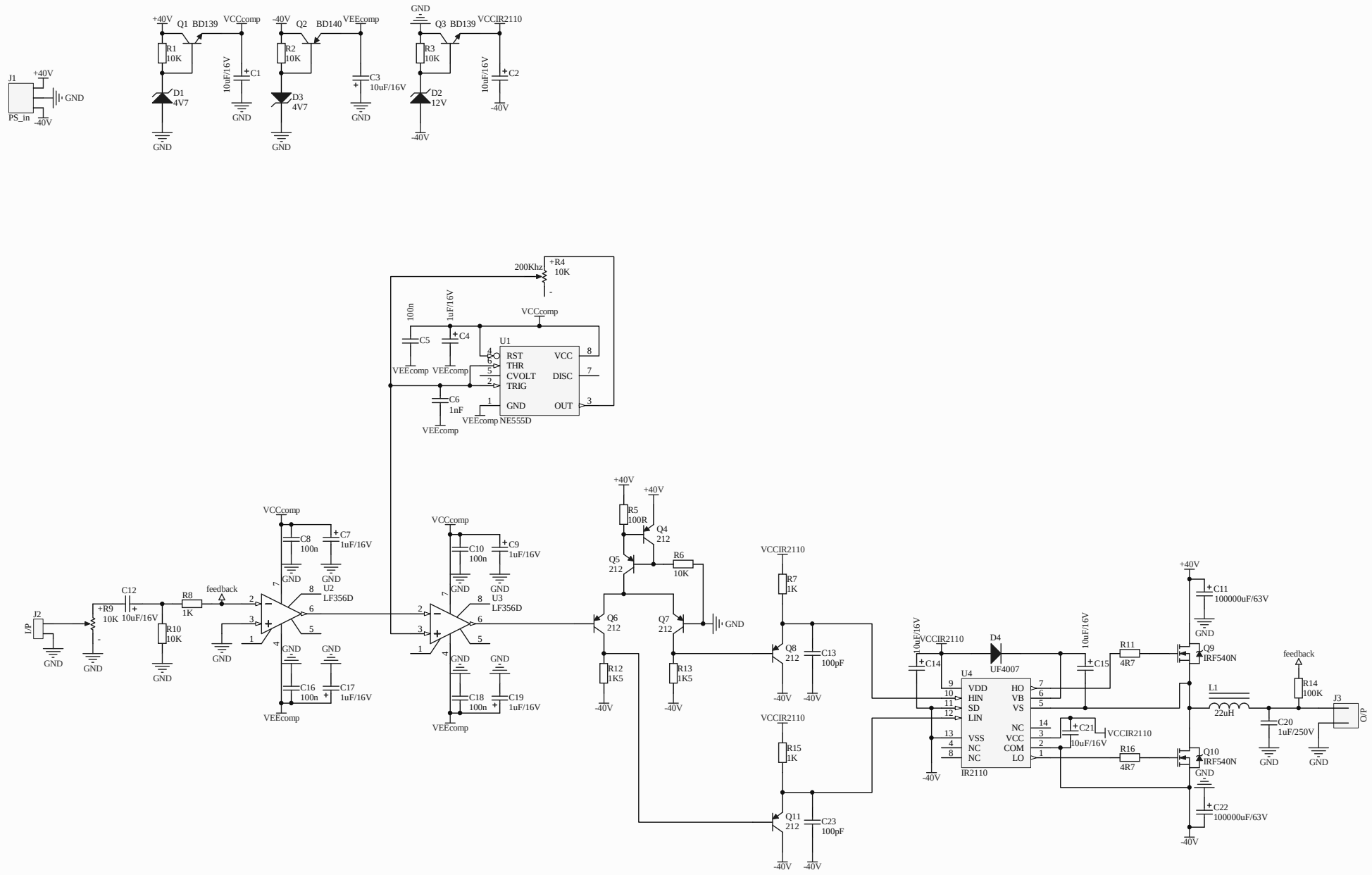

Title		
Size A3	Number	Revision
Date: 2011.11.23.	Sheet of	
File: D:\Sunci\..\Sheet1.SchDoc	Drawn By:	