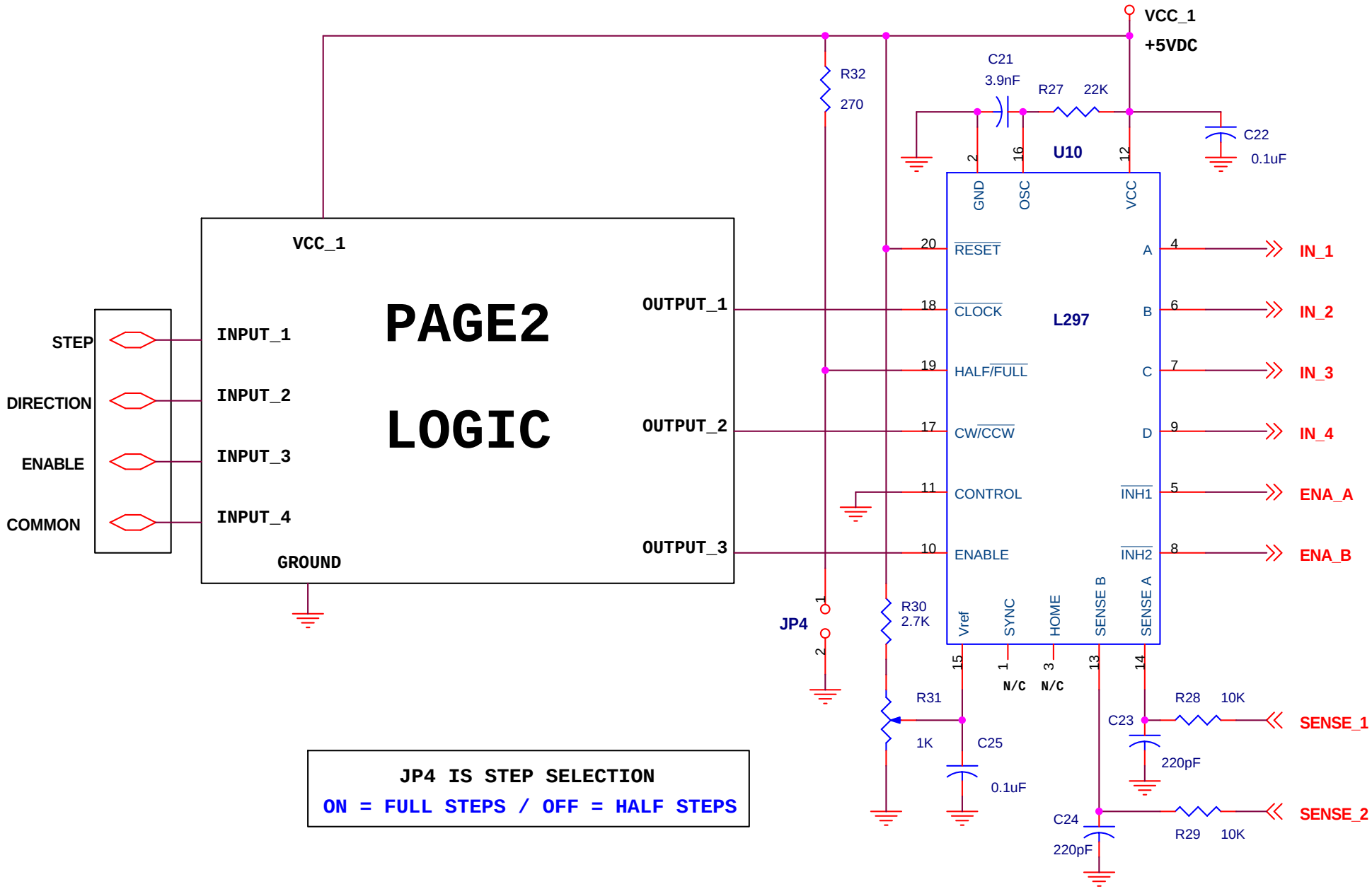

(C) 2008 VDB ENGINEERING, INC.

Title
MOTOR DRIVER CONTROLLER

Size	Document Number	Rev
A	CONTROLLER GEN4	3

Date: Monday, September 01, 2008 Sheet 1 of 1