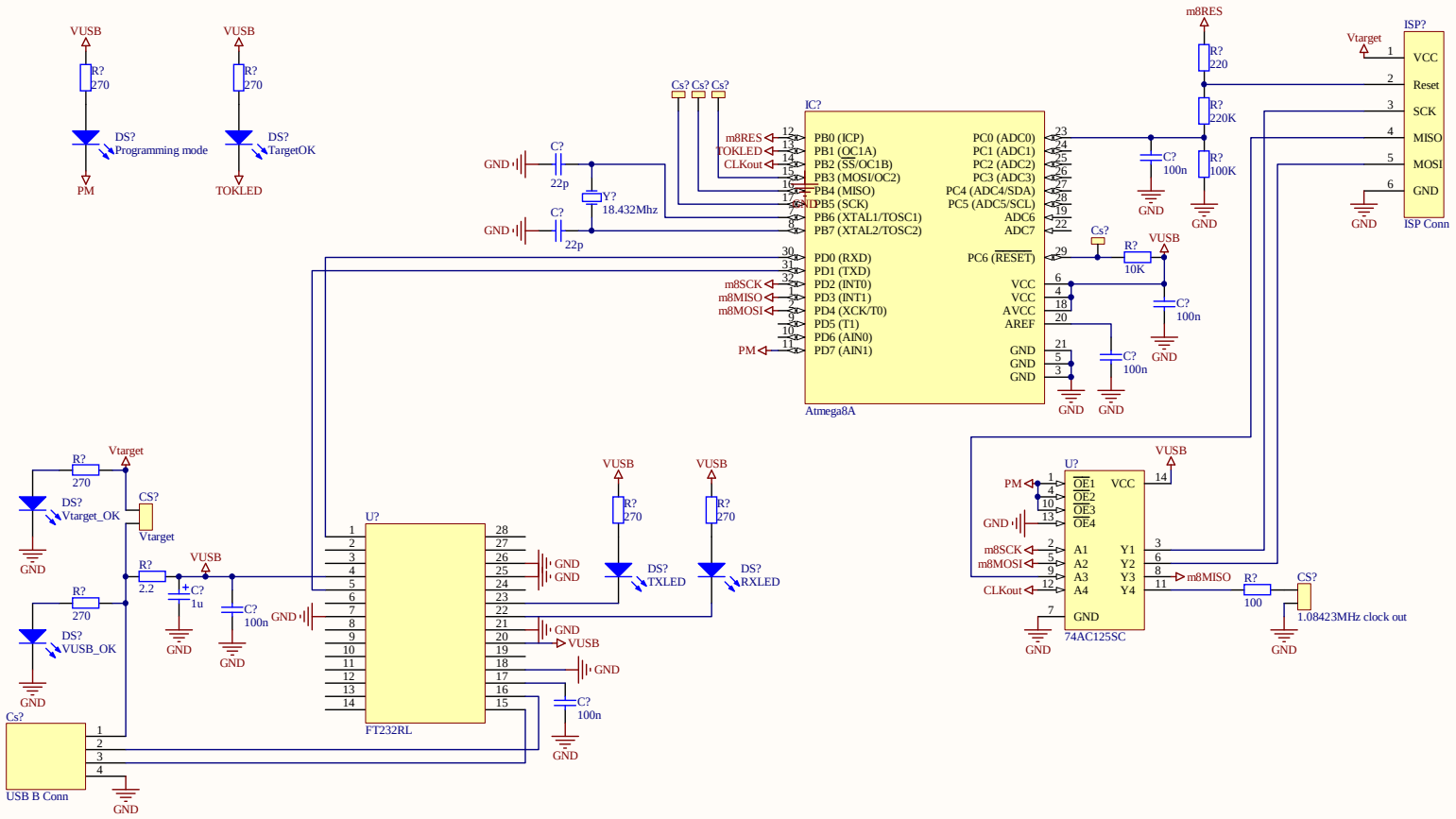

Title		
Size A3	Number	Revision
Date: 2012.02.02.	Sheet of	
File: D:\Altium\STK500v2\Sheet1.SchDoc	Drawn By:	