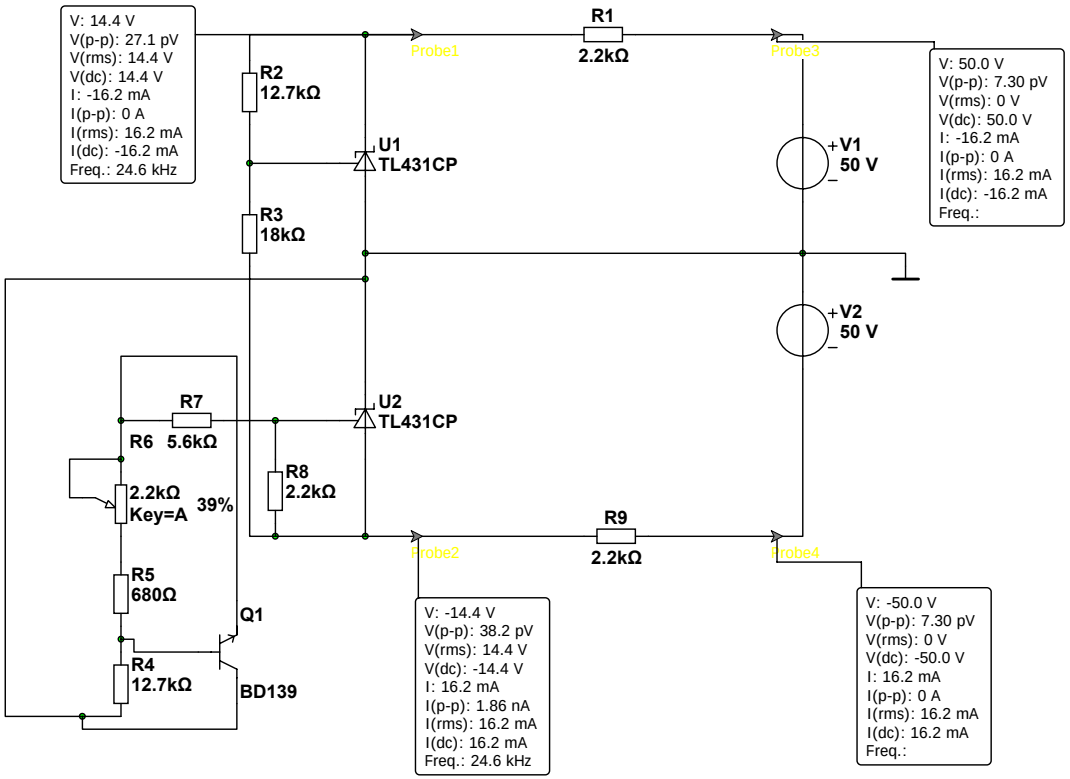
V: 14.4 V
V(p-p): 27.1 pV
V(rms): 14.4 V
V(dc): 14.4 V
I: -16.2 mA
I(p-p): 0 A
I(rms): 16.2 mA
I(dc): -16.2 mA
Freq.: 24.6 kHz
R1
2.2kΩ
Probe1
Probe3
V: 50.0 V
V(p-p): 7.30 pV
V(rms): 0 V
V(dc): 50.0 V
I: -16.2 mA
I(p-p): 0 A
I(rms): 16.2 mA
I(dc): -16.2 mA
Freq.:
R2
12.7kΩ
U1
TL431CP
V1
50 V
R3
18kΩ
V2
50 V
R7
5.6kΩ
U2
TL431CP
R6
2.2kΩ
Key=A
39%
R8
2.2kΩ
R9
2.2kΩ
Probe2
Probe4
R5
680Ω
Q1
R4
12.7kΩ
BD139
V: -14.4 V
V(p-p): 38.2 pV
V(rms): 14.4 V
V(dc): -14.4 V
I: 16.2 mA
I(p-p): 1.86 nA
I(rms): 16.2 mA
I(dc): 16.2 mA
Freq.: 24.6 kHz
V: -50.0 V
V(p-p): 7.30 pV
V(rms): 0 V
V(dc): -50.0 V
I: 16.2 mA
I(p-p): 0 A
I(rms): 16.2 mA
I(dc): 16.2 mA
Freq.: