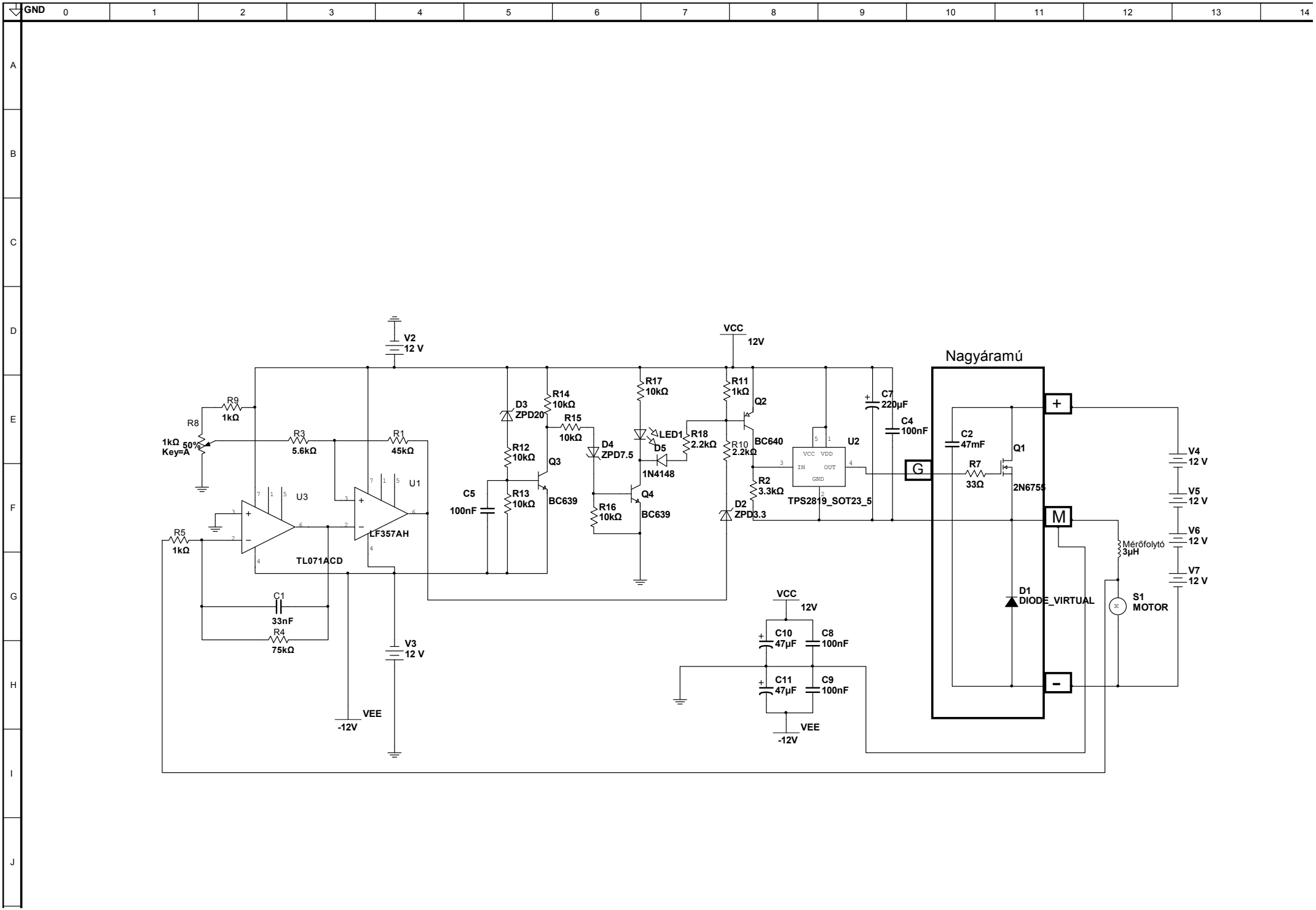
GND
V2
12 V
VCC
12V
Nagyáramú
R9
1kΩ
R8
1kΩ 50%
Key=A
R3
5.6kΩ
R1
45kΩ
U3
U1
LF357AH
TL071ACD
R5
1kΩ
C1
33nF
R4
75kΩ
V3
12 V
VEE
-12V
C5
100nF
D3
ZPD20
R14
10kΩ
R15
10kΩ
R12
10kΩ
Q3
R13
10kΩ
BC639
D4
ZPD7.5
R17
10kΩ
LED1
D5
1N4148
R18
2.2kΩ
R16
10kΩ
Q4
BC639
R11
1kΩ
Q2
BC640
R10
2.2kΩ
R2
3.3kΩ
D2
ZPD3.3
U2
VCC VDD
IN OUT
GND
TPS2819_SOT23_5
C7
220µF
C4
100nF
G
C2
47mF
R7
33Ω
Q1
2N6755
+
M
-
D1
DIODE_VIRTUAL
Mérőfolytó
3µH
S1
MOTOR
V4
12 V
V5
12 V
V6
12 V
V7
12 V
VCC
12V
C10
47µF
C8
100nF
C11
47µF
C9
100nF
VEE
-12V

| | 15 | 16 | 17 | |
|---|---|---|---|---|
| | | | | A |
| | | | | B |
| | | | | C |
| | | | | D |
| | | | | E |
| | | | | F |
| | | | | G |
| | | | | H |
| | | | | I |
| | | | | J |

| | | | | | | | | | | | | | | | |
|---|---|---|---|---|---|---|---|---|---|---|---|---|---|---|---|
| K | | | | | | | | | | | | | | | |
| L | | | | | | | | | | | | | | | |
| M | | | | | | | | | | | | | | | |
| N | | | | | | | | | | | | | | | |
| O | | | | | | | | | | | | | | | |
| P | | | | | | | | | | | | | | | |
| Q | | | | | | | | | | | | | | | |
| R | | | | | | | | | | | | | | | |
| | 0 | 1 | 2 | 3 | 4 | 5 | 6 | 7 | 8 | 9 | 10 | 11 | 12 | 13 | 14 |

K

L

M

N

O

P

Q

R

15 16 17