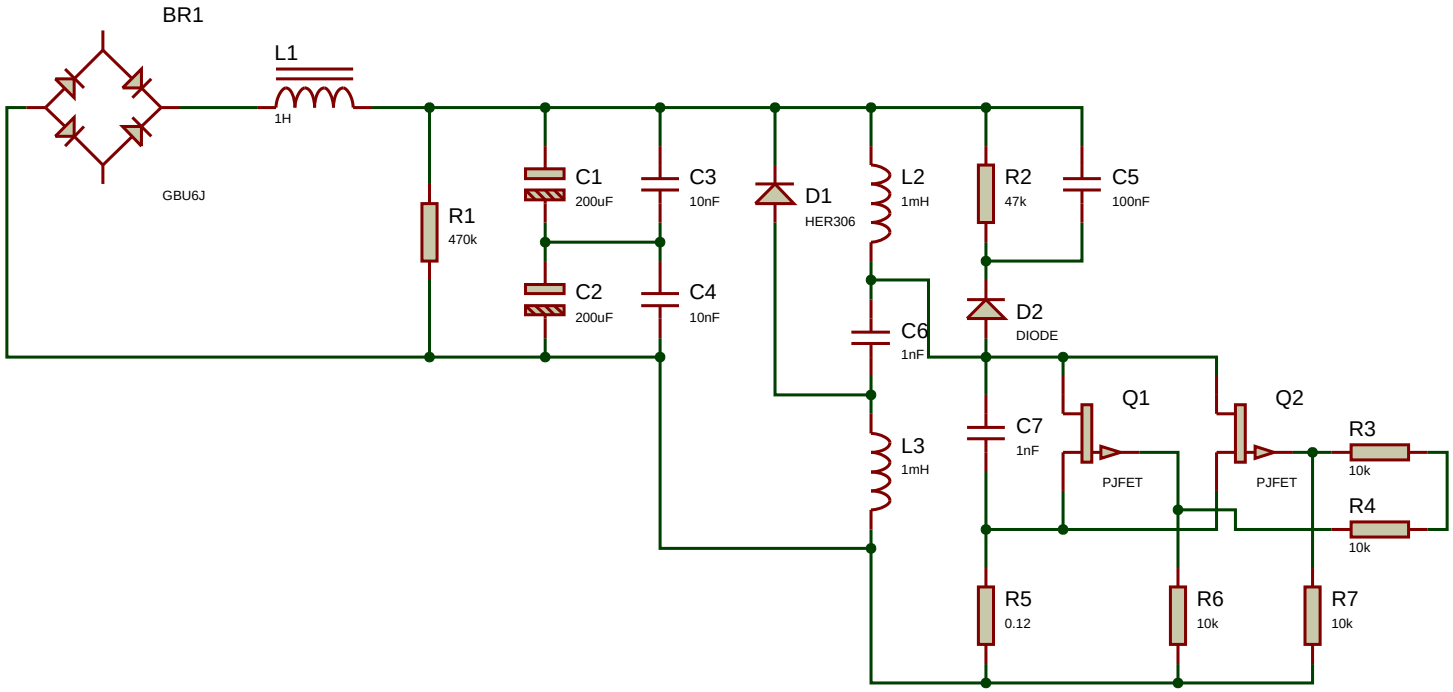
BR1
GBU6J
L1
1H
R1
470k
C1
200uF
C2
200uF
C3
10nF
C4
10nF
D1
HER306
L2
1mH
C6
1nF
L3
1mH
R2
47k
C5
100nF
D2
DIODE
C7
1nF
Q1
PJFET
Q2
PJFET
R3
10k
R4
10k
R5
0.12
R6
10k
R7
10k