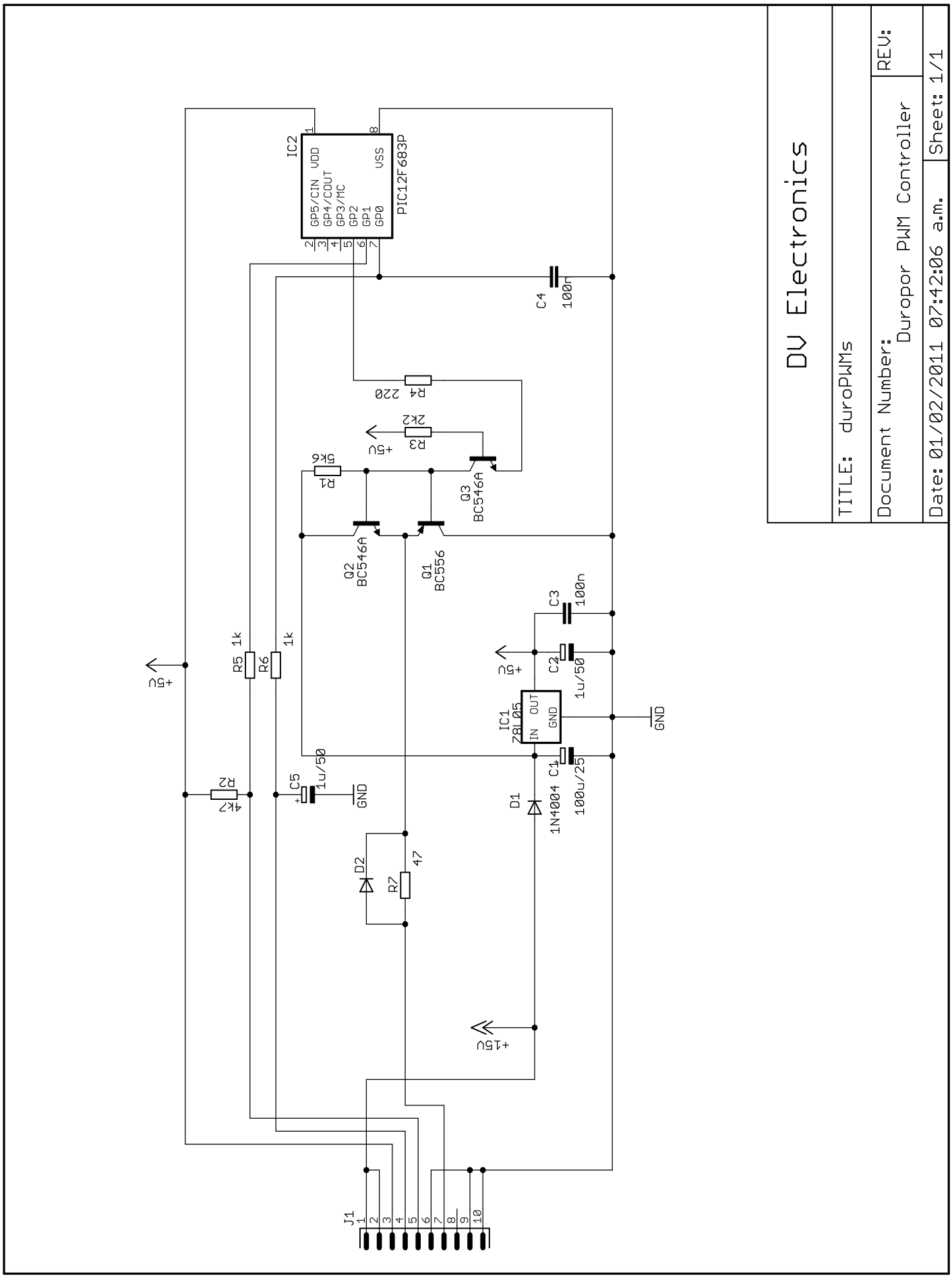
DV Electronics
TITLE: duroPWMs
Document Number: Duropor PWM Controller
REV:
Date: 01/02/2011 07:42:06 a.m.
Sheet: 1/1
IC2
PIC12F683P
GP5/CIN VDD
GP4/COUT
GP3/MC
GP2
GP1
GP0
VSS
C4 100n
R4 220
R3 2K2
+5V
R1 5K6
Q3 BC546A
Q2 BC546A
Q1 BC556
C3 100n
C2 1u/50
IC1 78L05
IN OUT
GND
C1 100u/25
D1 1N4004
R5 1k
R6 1k
R2 4K7
C5 1u/50
D2
R7 47
+15V
J1