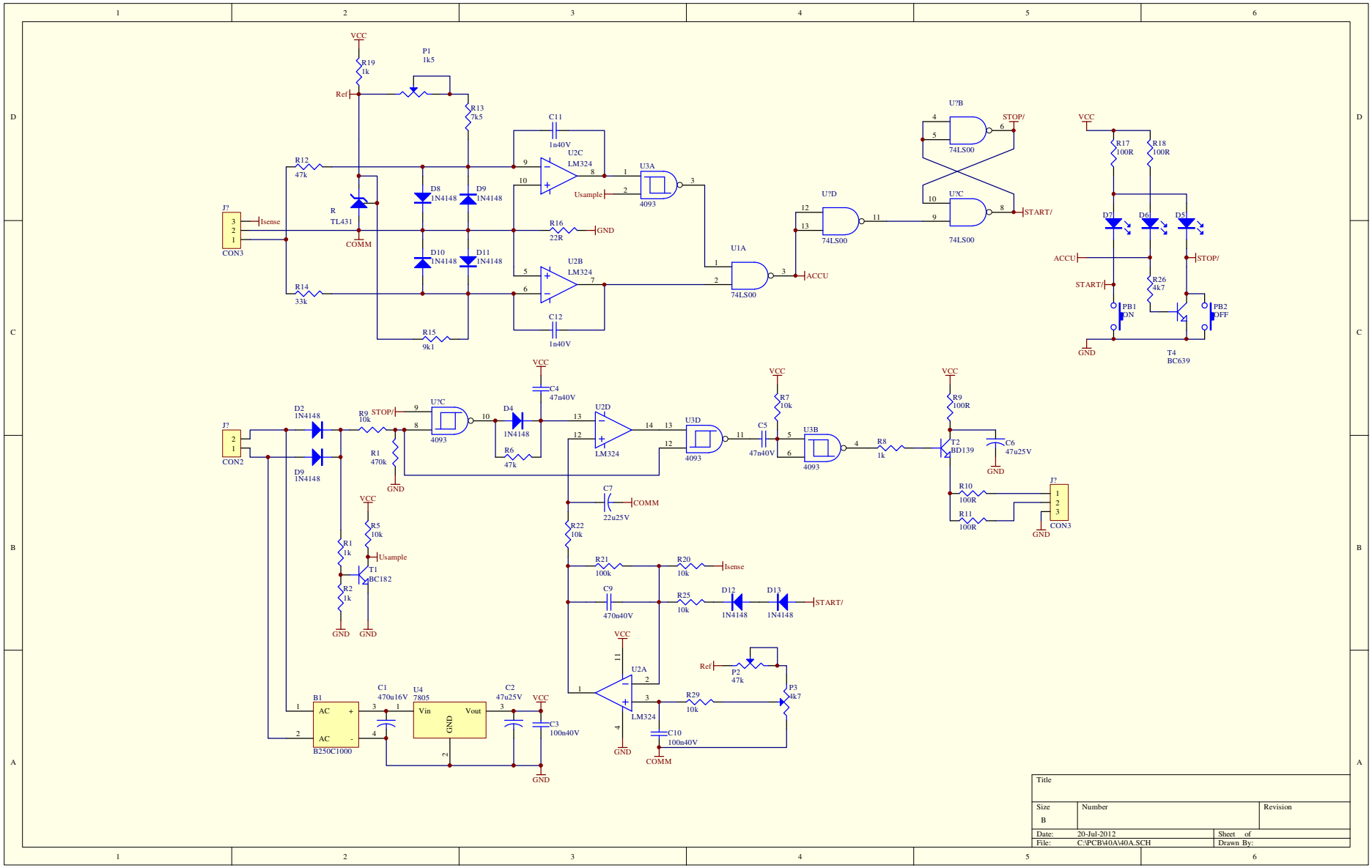

Title		
Size B	Number	Revision
Date: 20-Jul-2012		Sheet of
File: C:\PCB\40A\40A.SCH		Drawn By: