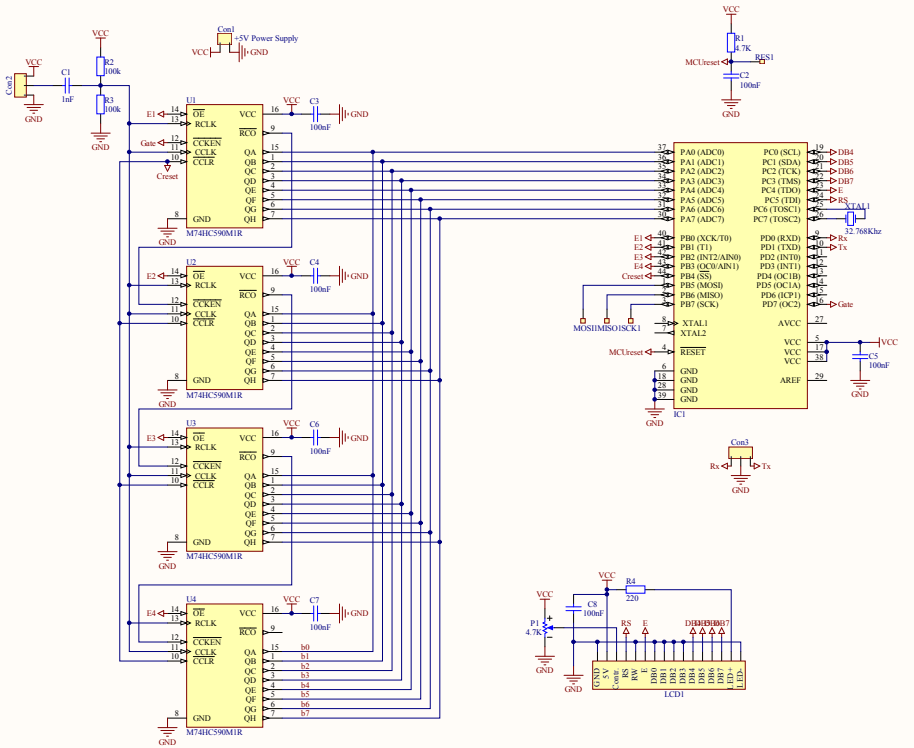

Title		
Size: A2	Number	Revision
Date: 2012.08.25		Sheet of
File: D:\Electronics\...\Sheet1.SchDoc		Drawn By: