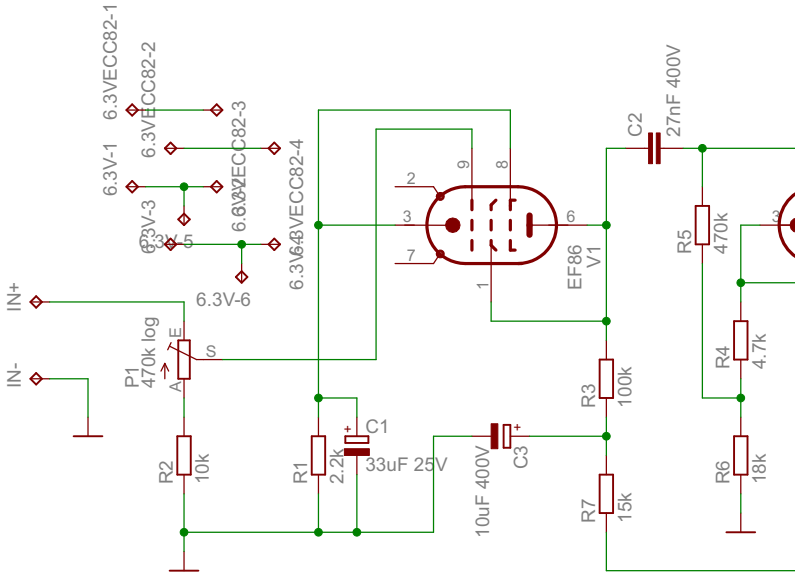
6.3V-1
6.3VECC82-1
6.3VECC82-2
6.3V-3
6.3VECC82-3
6.3V-5
6.3V-6
6.3VECC82-4
IN+
IN-
P1
470k log
A
E
S
R2
10k
R1
2.2k
C1
33uF 25V
10uF 400V
C3
EF86
V1
R3
100k
R7
15k
C2
27nF 400V
R5
470k
R4
4.7k
R6
18k

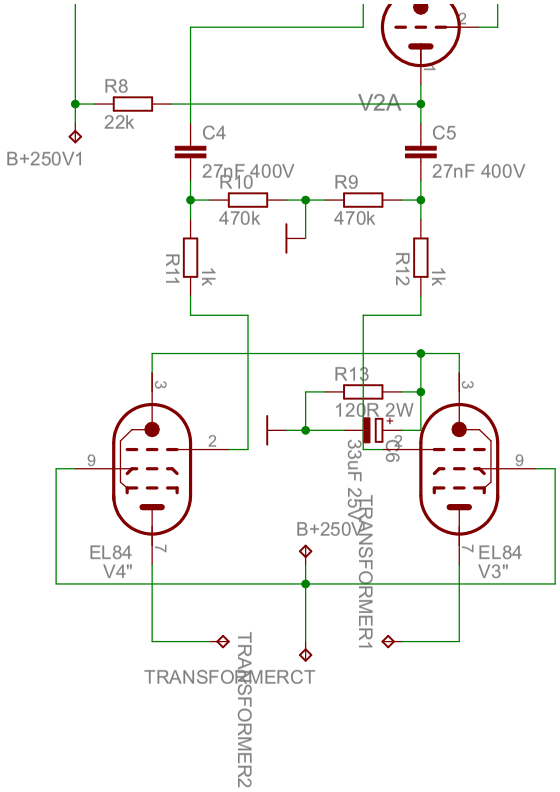
V2A
R8
22k
B+250V1
C4
27nF 400V
C5
27nF 400V
R10
470k
R9
470k
R11
1k
R12
1k
R13
120R 2W
C6
33uF 25V
B+250V
EL84
V4"
EL84
V3"
TRANSFORMER1
TRANSFORMER2
TRANSFORMERCT