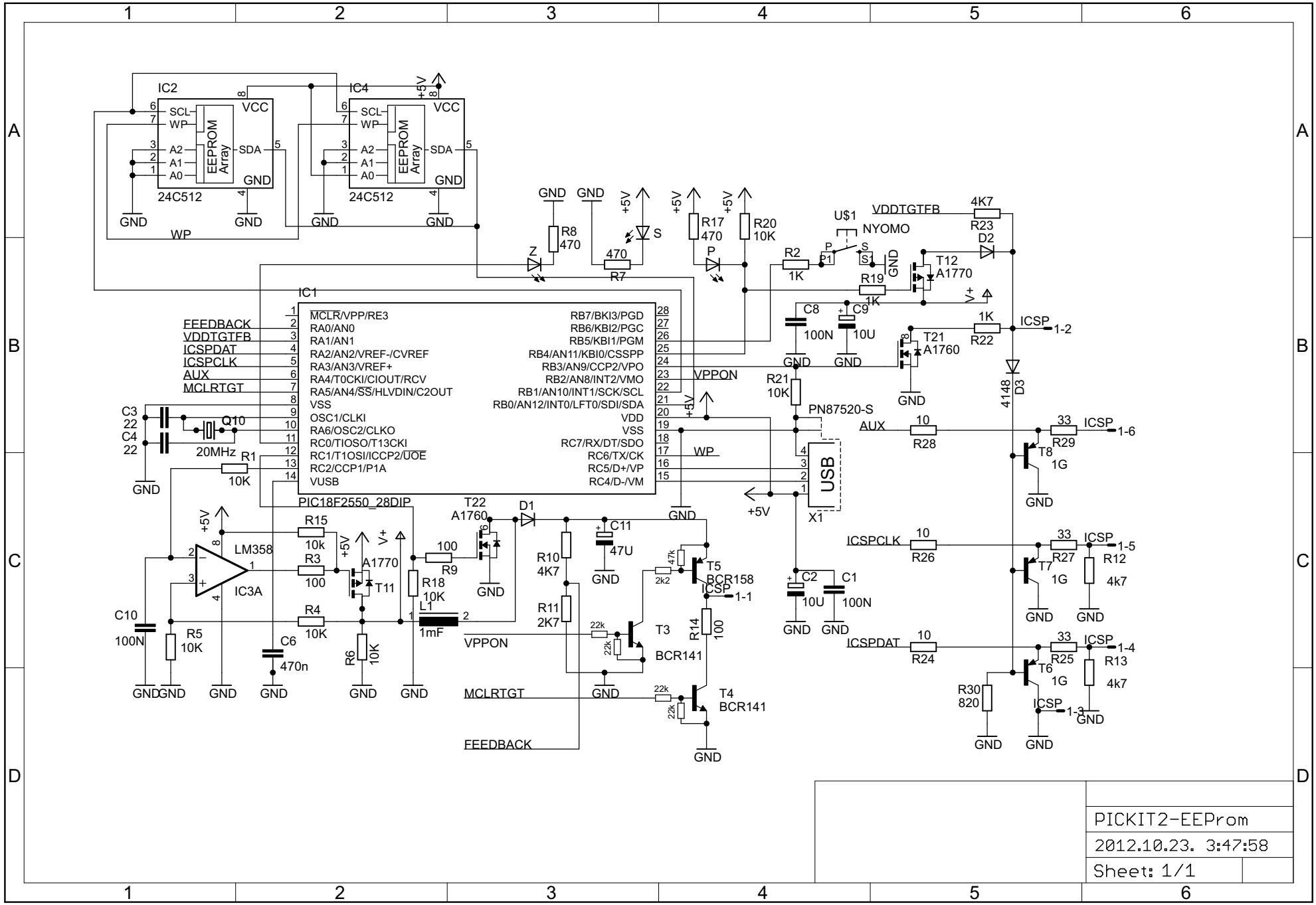


PICKIT2-EEProm

2012.10.23. 3:47:58

Sheet: 1/1