6-13. SCHEMATIC DIAGRAM – MAIN SECTION (2/2) –

• See page 43 for IC Block Diagrams. • See page 39 for Waveform. • See page 44 for IC Pin Function Description.

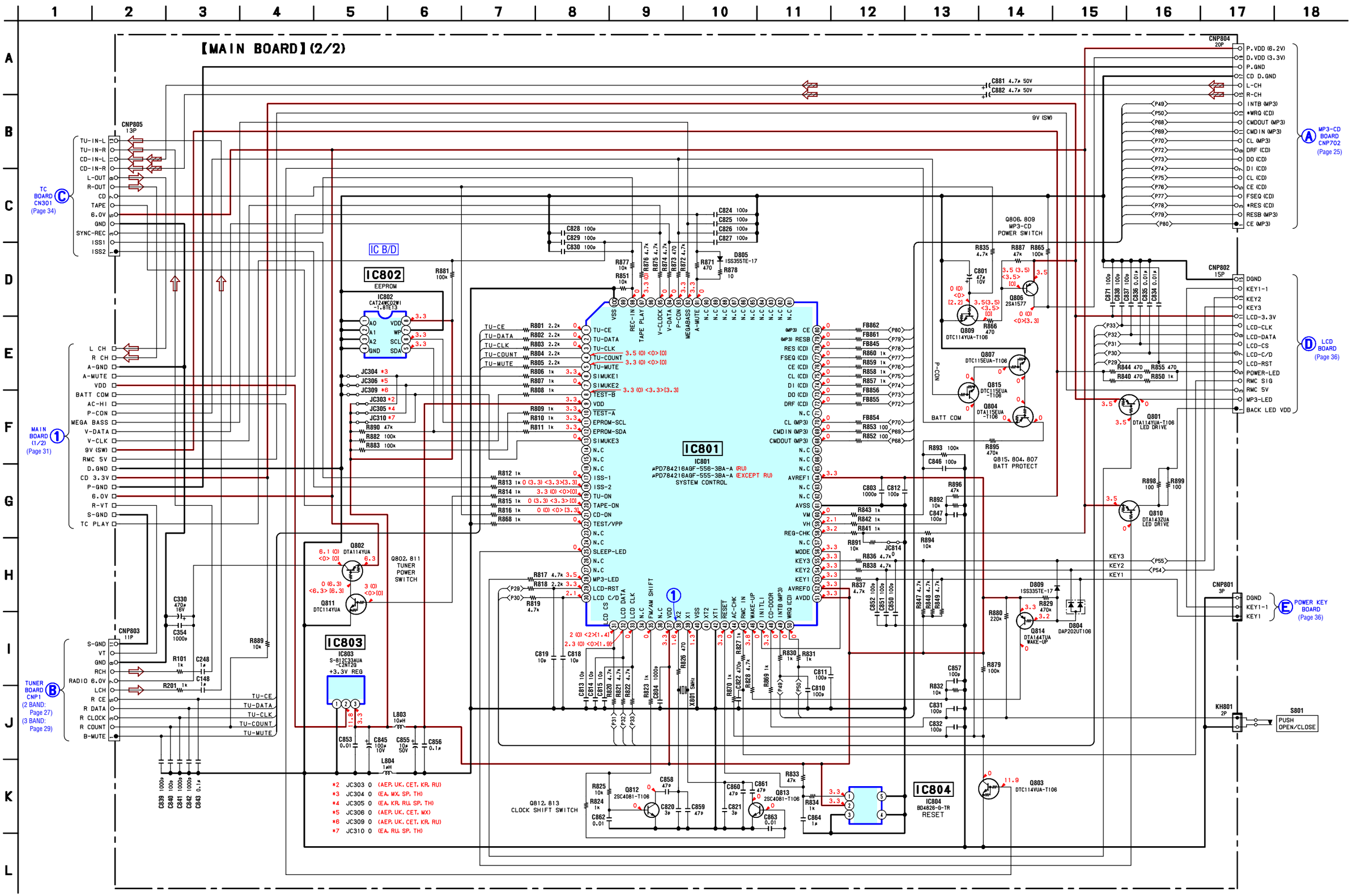

6-14. PRINTED WIRING BOARD – TC SECTION –

• See page 23 for Circuit Boards Location. :Uses unleaded solder.

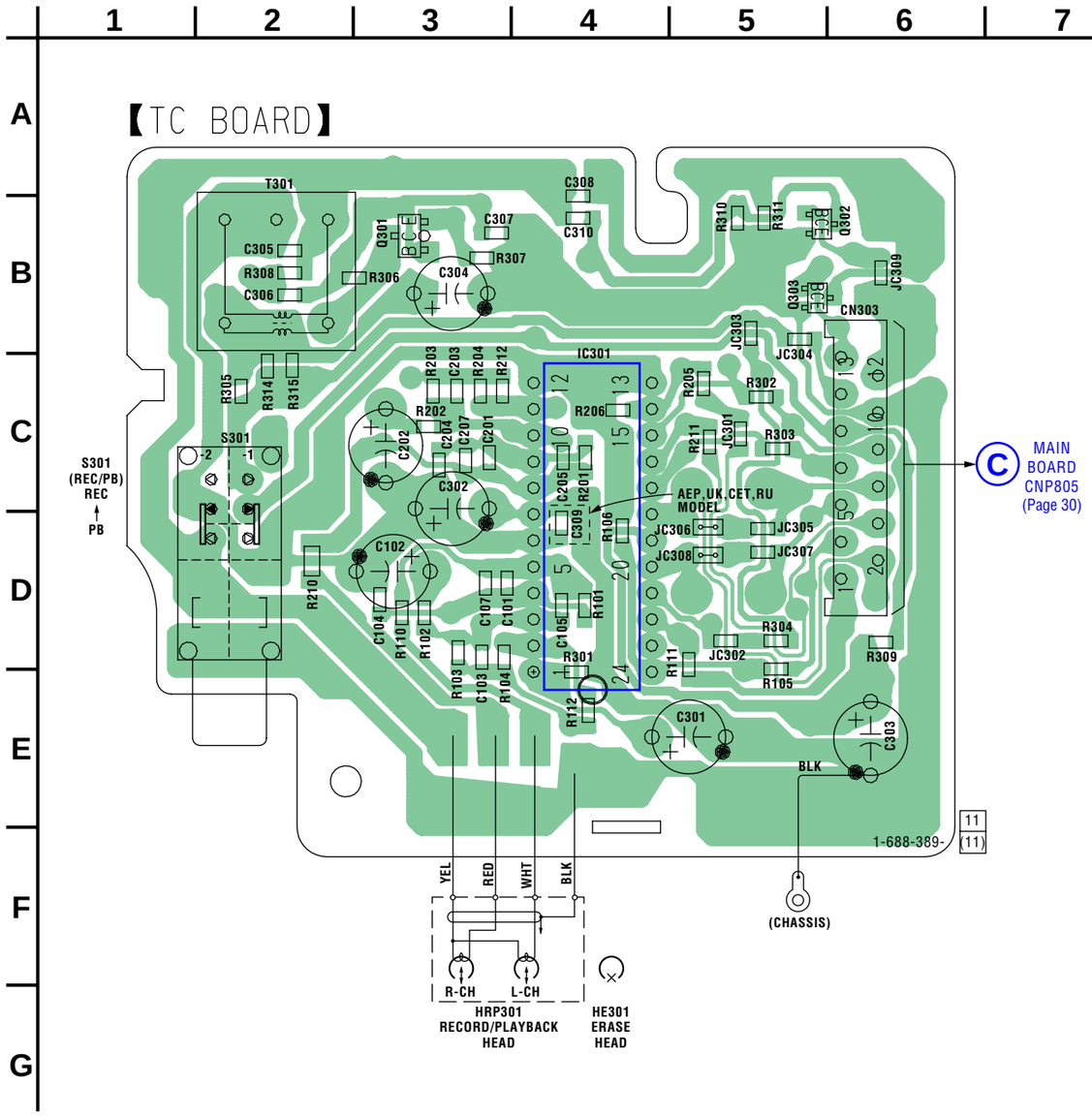

6-15. SCHEMATIC DIAGRAM – TC SECTION –

• See page 43 for IC Block Diagram. • See page 39 for Waveforms.

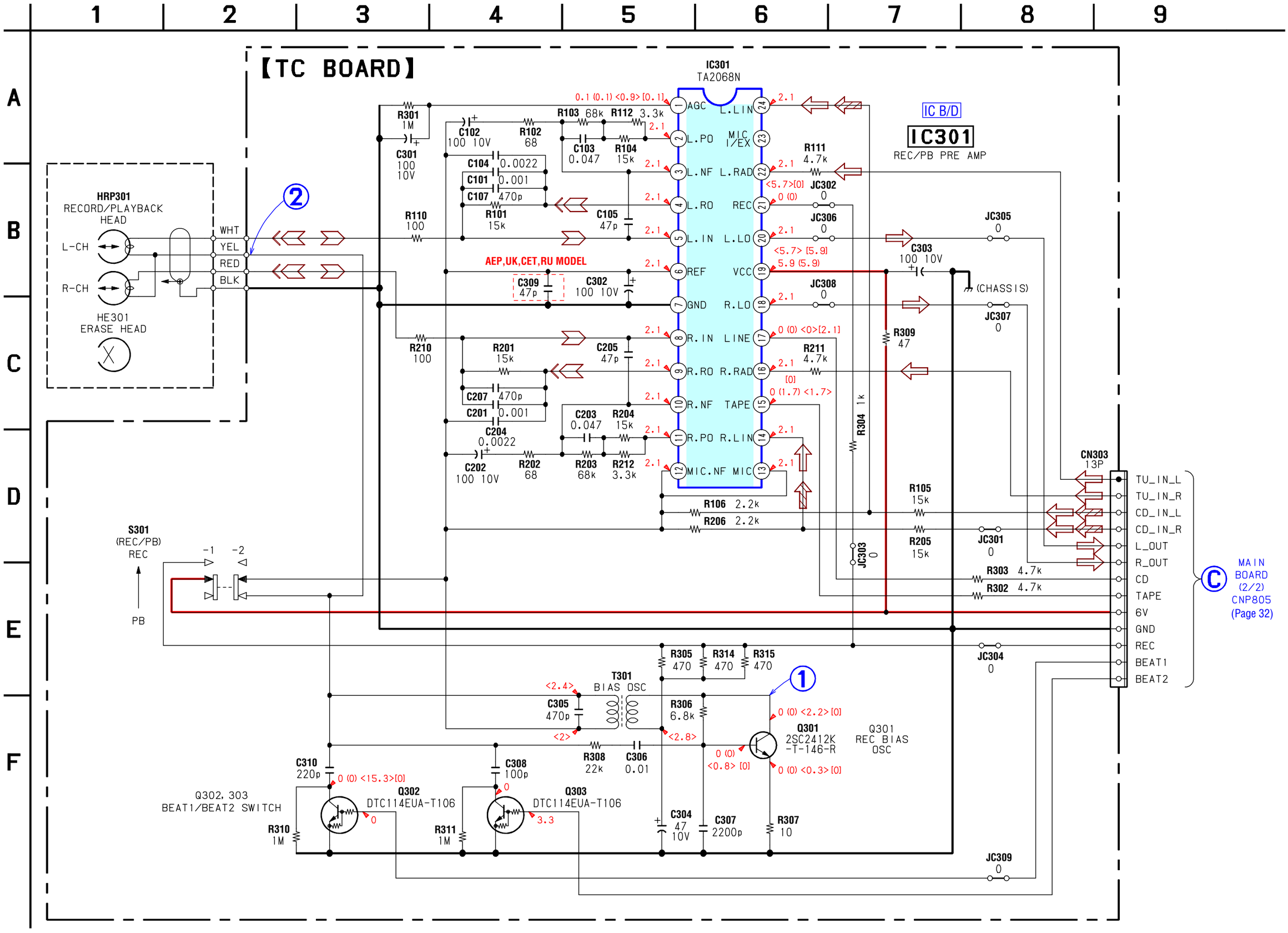

6-16. PRINTED WIRING BOARDS – CONTROL SECTION –
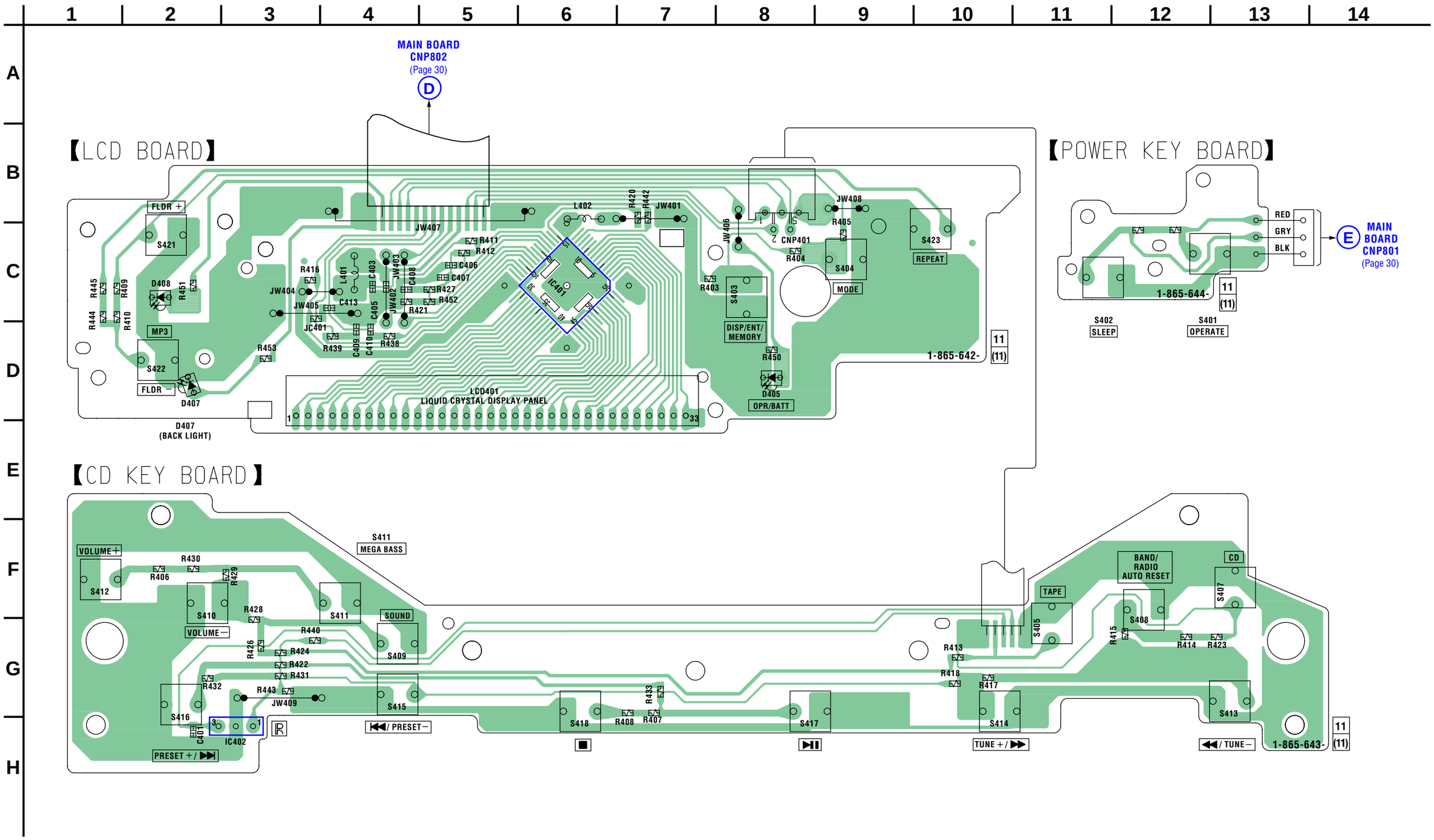
• See page 23 for Circuit Boards Location. :Uses unleaded solder.