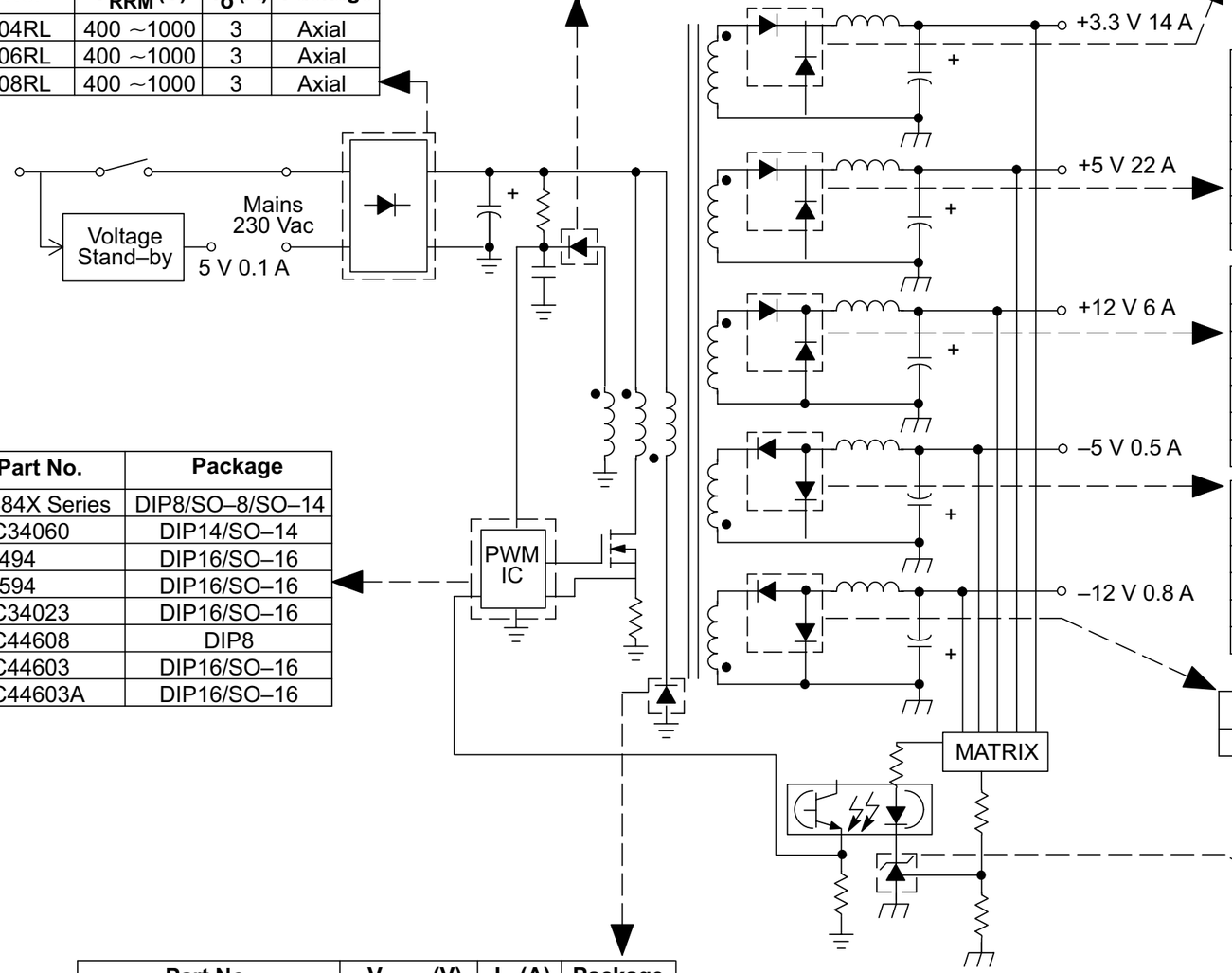


| Part No. | $V_{RRM}$ (V) | $I_O$ (A) | Package |
|---|---|---|---|
| 1N5404RL | 400 ~1000 | 3 | Axial |
| 1N5406RL | 400 ~1000 | 3 | Axial |
| 1N5408RL | 400 ~1000 | 3 | Axial |

| Part No. | $V_{RRM}$ (V) | $I_O$ (A) | Package |
|---|---|---|---|
| MBR160 | 60 | 1 | Axial |

| Part No. | $V_{RRM}$ (V) | $I_O$ (A) | Package |
|---|---|---|---|
| MBR2535CTL | 35 | 25 | TO–220 |

| Part No. | $V_{RRM}$ (V) | $I_O$ (A) | Package |
|---|---|---|---|
| MBR2535CTL | 35 | 25 | TO–220 |
| MBR2545CT | 45 | 25 | TO–220 |
| MBR3045ST | 45 | 30 | TO–220 |
| MBRF2545CT | 45 | 25 | TO–220 |
| MBR3045PT | 45 | 30 | TO–218 |
| MBR3045WT | 45 | 30 | TO–247 |

| Part No. | $V_{RRM}$ (V) | $I_O$ (A) | Package |
|---|---|---|---|
| MBR2060CT | 60 | 20 | TO–220 |
| MBR20100CT | 100 | 20 | TO–220 |
| MBR20200CT | 200 | 20 | TO–220 |
| MUR1620CT | 200 | 16 | TO–220 |
| MUR1620CTR | 200 | 16 | TO–220 |
| MURF1620CT | 200 | 16 | TO–220 |

| Part No. | $V_{RRM}$ (V) | $I_O$ (A) | Package |
|---|---|---|---|
| MBRS340T3 | 40 | 3 | SMC |
| MBRD340 | 40 | 3 | DPAK |
| 1N5821 | 30 | 3 | Axial |
| 1N5822 | 40 | 3 | Axial |
| MBR340 | 40 | 3 | Axial |

| Part No. | $V_{RRM}$ (V) | $I_O$ (A) | Package |
|---|---|---|---|
| MBR3100 | 100 | 3 | Axial |

| Part No. | Package |
|---|---|
| U384X Series | DIP8/SO–8/SO–14 |
| MC34060 | DIP14/SO–14 |
| TL494 | DIP16/SO–16 |
| TL594 | DIP16/SO–16 |
| MC34023 | DIP16/SO–16 |
| MC44608 | DIP8 |
| MC44603 | DIP16/SO–16 |
| MC44603A | DIP16/SO–16 |

| Part No. | Package |
|---|---|
| TL431 | TO–92 |

| Part No. | $V_{RRM}$ (V) | $I_O$ (A) | Package |
|---|---|---|---|
| MUR180E, MUR1100E | 600 ~1000 | 1 | Axial |
| MUR480E, MUR4100E | 600 ~1000 | 4 | Axial |
| MR756RL, MR760RL | 600 ~1000 | 6 | Axial |
| 1N4937 | 600 | 1 | Axial |

**Figure 35. Typical 200 W ATX Forward Mode SMPS**