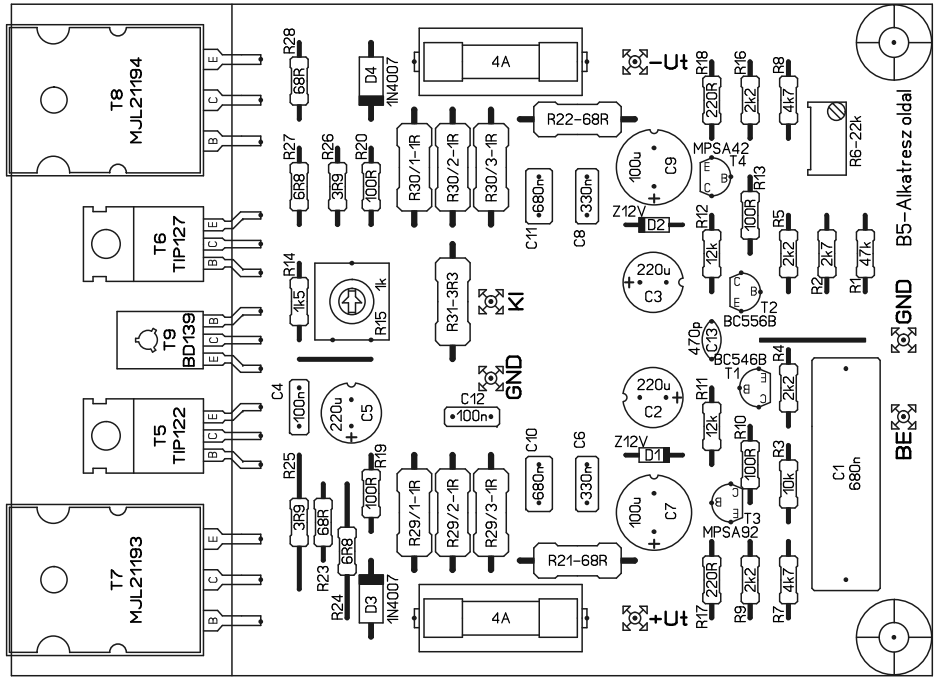
T8
MJL21194
T6
TIP127
T9
BD139
T5
TIP122
T7
MJL21193
4A
-Ut
+Ut
R22-68R
R21-68R
R30/1-1R
R30/2-1R
R30/3-1R
R29/1-1R
R29/2-1R
R29/3-1R
R31-3R3
MPSA42
MPSA92
BC556B
BC546B
Z12V
KI
GND
BE
C1
680n
R6-22k
B5-Alkatresz oldal

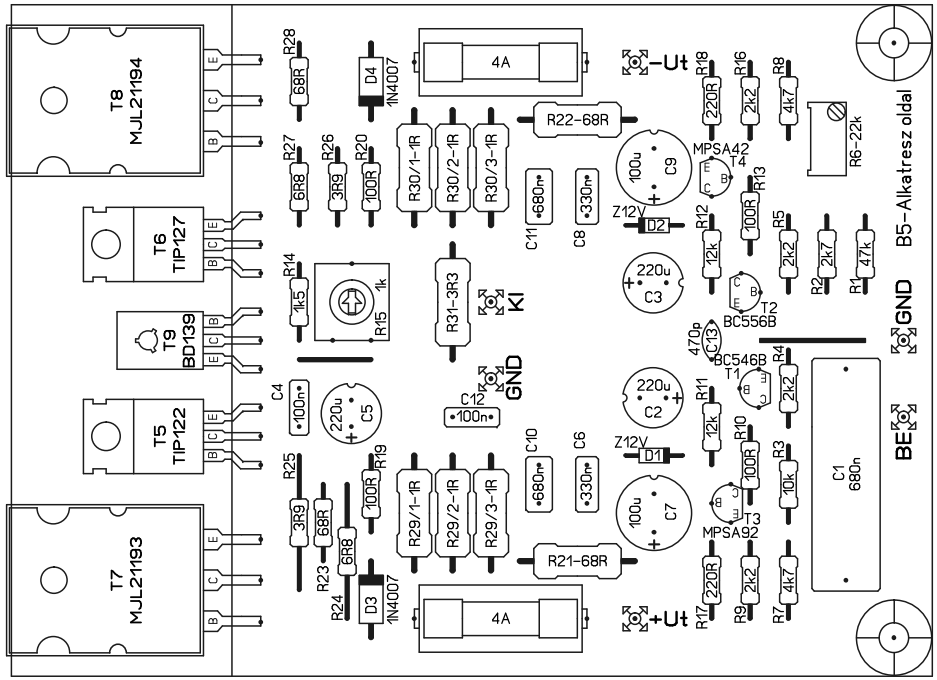
T8
MJL21194
T6
TIP127
T9
BD139
T5
TIP122
T7
MJL21193
4A
-Ut
+Ut
R22-68R
R21-68R
R30/1-1R
R30/2-1R
R30/3-1R
R29/1-1R
R29/2-1R
R29/3-1R
R31-3R3
MPSA42
MPSA92
BC556B
BC546B
Z12V
KI
GND
BE
C1
680n
R6-22k
B5-Alkatresz oldal

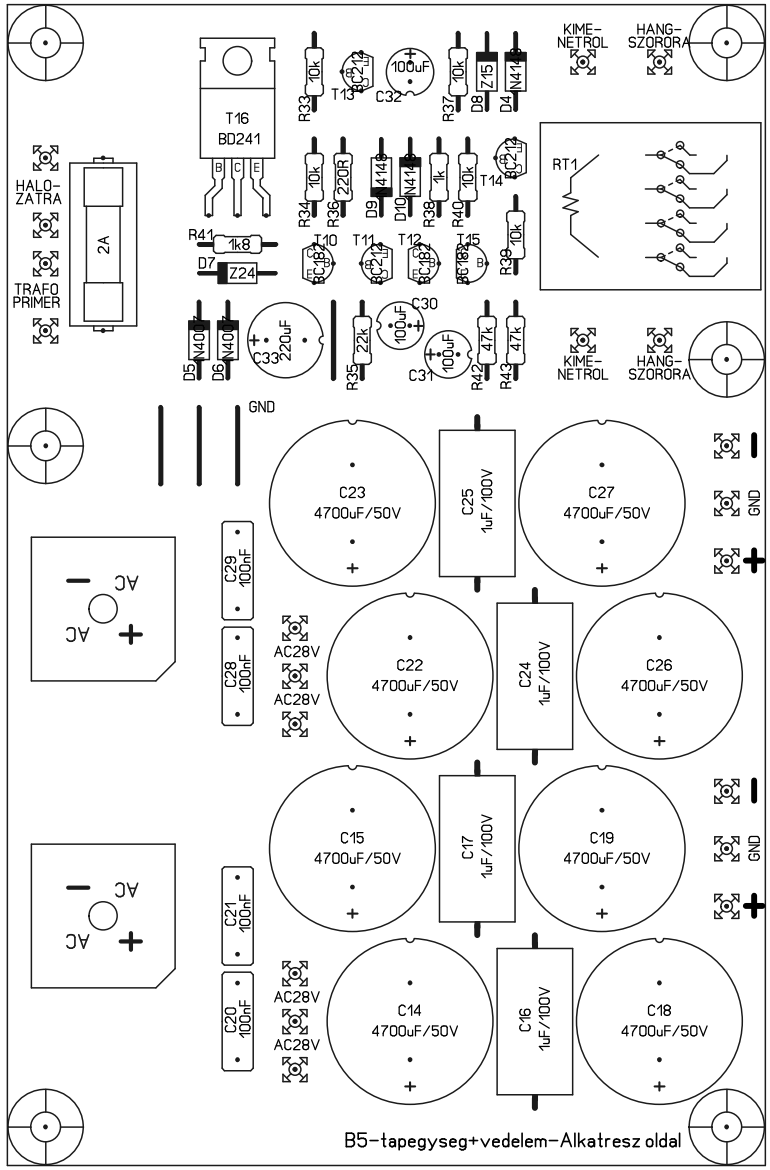
T16
BD241
HALO-
ZATRA
TRAFO
PRIMER
2A
KIME-
NETROL
HANG-
SZORORA
RT1
GND
C23
4700uF/50V
C25
1uF/100V
C27
4700uF/50V
C22
4700uF/50V
C24
1uF/100V
C26
4700uF/50V
C15
4700uF/50V
C17
1uF/100V
C19
4700uF/50V
C14
4700uF/50V
C16
1uF/100V
C18
4700uF/50V
AC28V
AC
B5-tapegyseg+vedelem-Alkatresz oldal

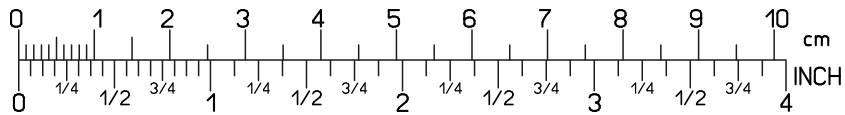
0
1
2
3
4
5
6
7
8
9
10
cm
INCH
1/4
1/2
3/4