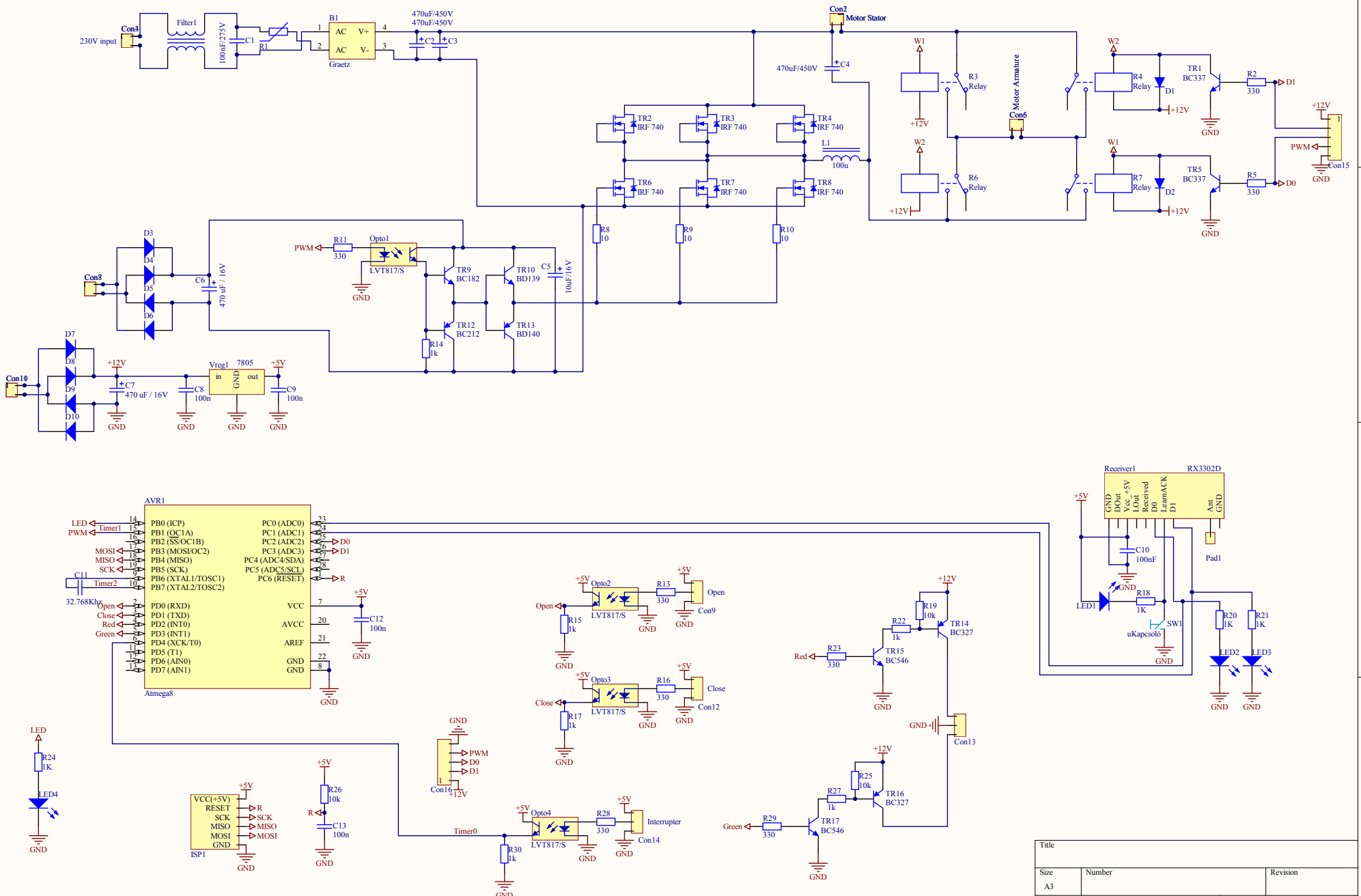

Title		
Size A3	Number	Revision
Date: 2013.05.15.		Sheet of
File: D:\Electronics\..\Sheet1.SchDoc		Drawn By: