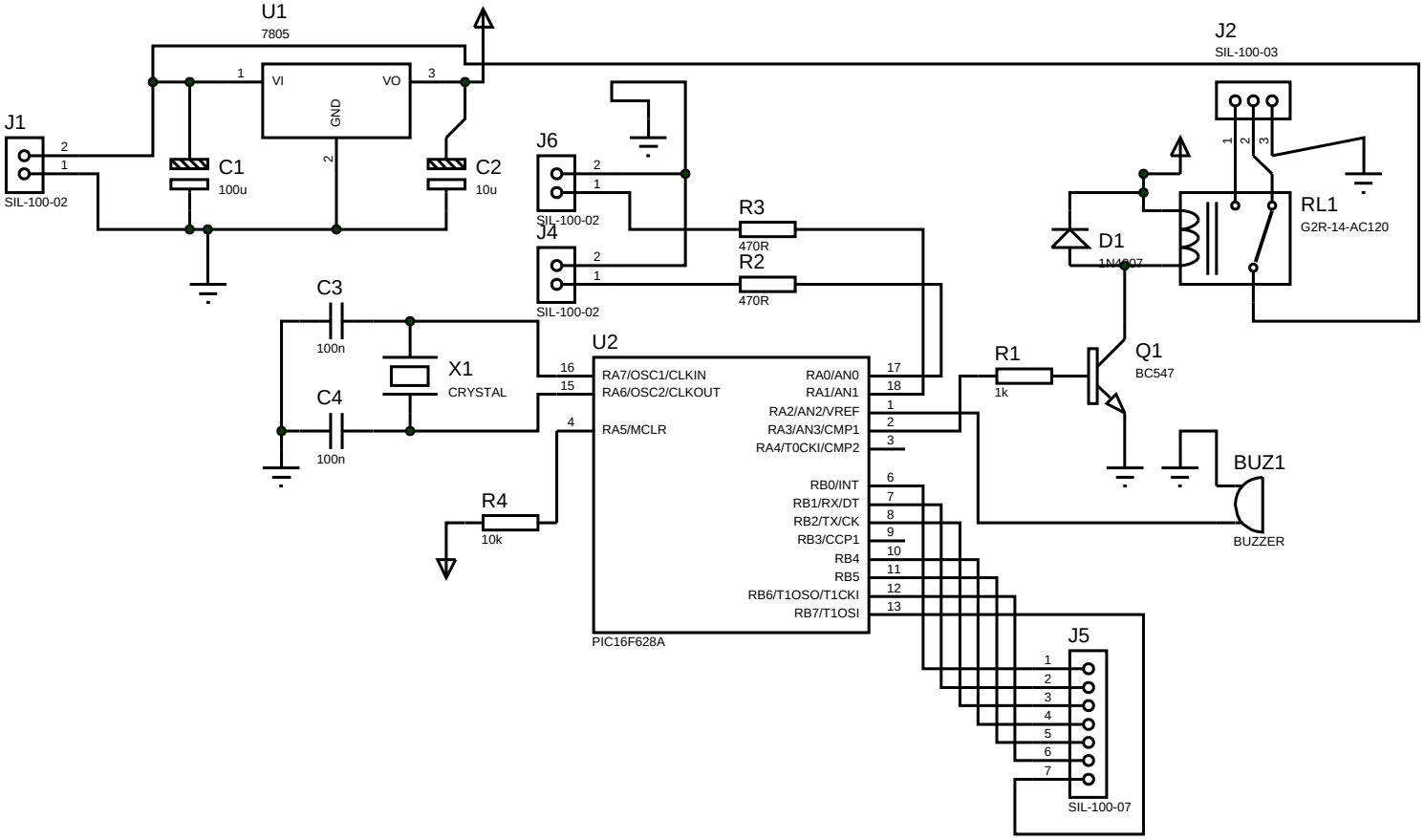
U1
7805
VI
VO
GND
J1
SIL-100-02
C1
100u
C2
10u
J6
SIL-100-02
J4
SIL-100-02
R3
470R
R2
470R
C3
100n
C4
100n
X1
CRYSTAL
U2
RA7/OSC1/CLKIN
RA6/OSC2/CLKOUT
RA5/MCLR
RA0/AN0
RA1/AN1
RA2/AN2/VREF
RA3/AN3/CMP1
RA4/T0CKI/CMP2
RB0/INT
RB1/RX/DT
RB2/TX/CK
RB3/CCP1
RB4
RB5
RB6/T1OSO/T1CKI
RB7/T1OSI
PIC16F628A
R4
10k
R1
1k
Q1
BC547
D1
1N4007
J2
SIL-100-03
RL1
G2R-14-AC120
BUZ1
BUZZER
J5
SIL-100-07