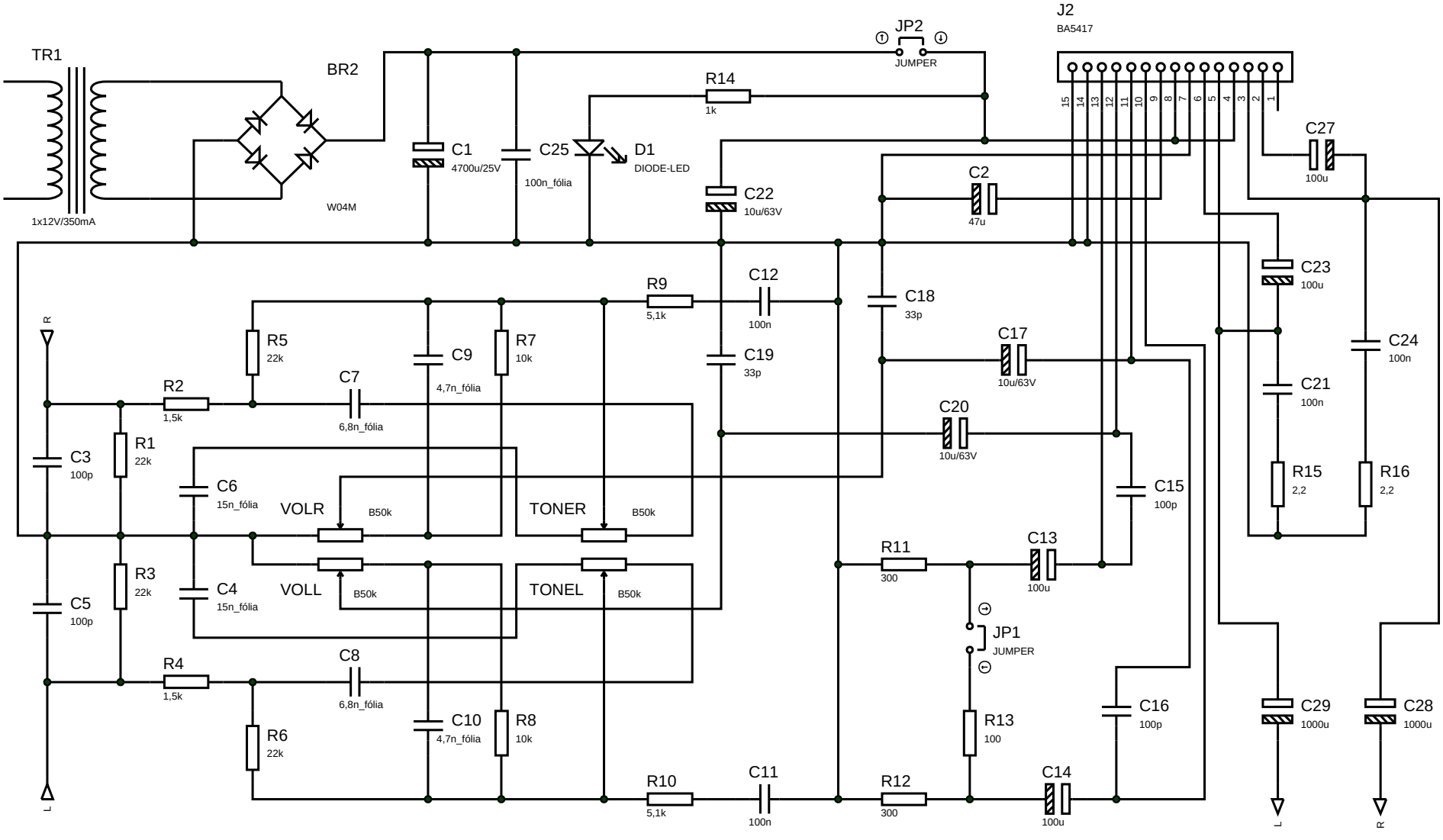
TR1
1x12V/350mA
BR2
W04M
C1
4700u/25V
C25
100n_fólia
D1
DIODE-LED
R14
1k
JP2
JUMPER
J2
BA5417
C27
100u
C22
10u/63V
C2
47u
C23
100u
R9
5,1k
C12
100n
C18
33p
C24
100n
C17
10u/63V
C19
33p
C21
100n
R5
22k
C9
4,7n_fólia
R7
10k
R2
1,5k
C7
6,8n_fólia
C20
10u/63V
C3
100p
R1
22k
C6
15n_fólia
VOLR
B50k
TONER
B50k
C15
100p
R15
2,2
R16
2,2
R11
300
C13
100u
R3
22k
C4
15n_fólia
VOLL
B50k
TONEL
B50k
C5
100p
JP1
JUMPER
R4
1,5k
C8
6,8n_fólia
C16
100p
C29
1000u
C28
1000u
R13
100
R6
22k
C10
4,7n_fólia
R8
10k
R10
5,1k
C11
100n
R12
300
C14
100u
R
L
L
R