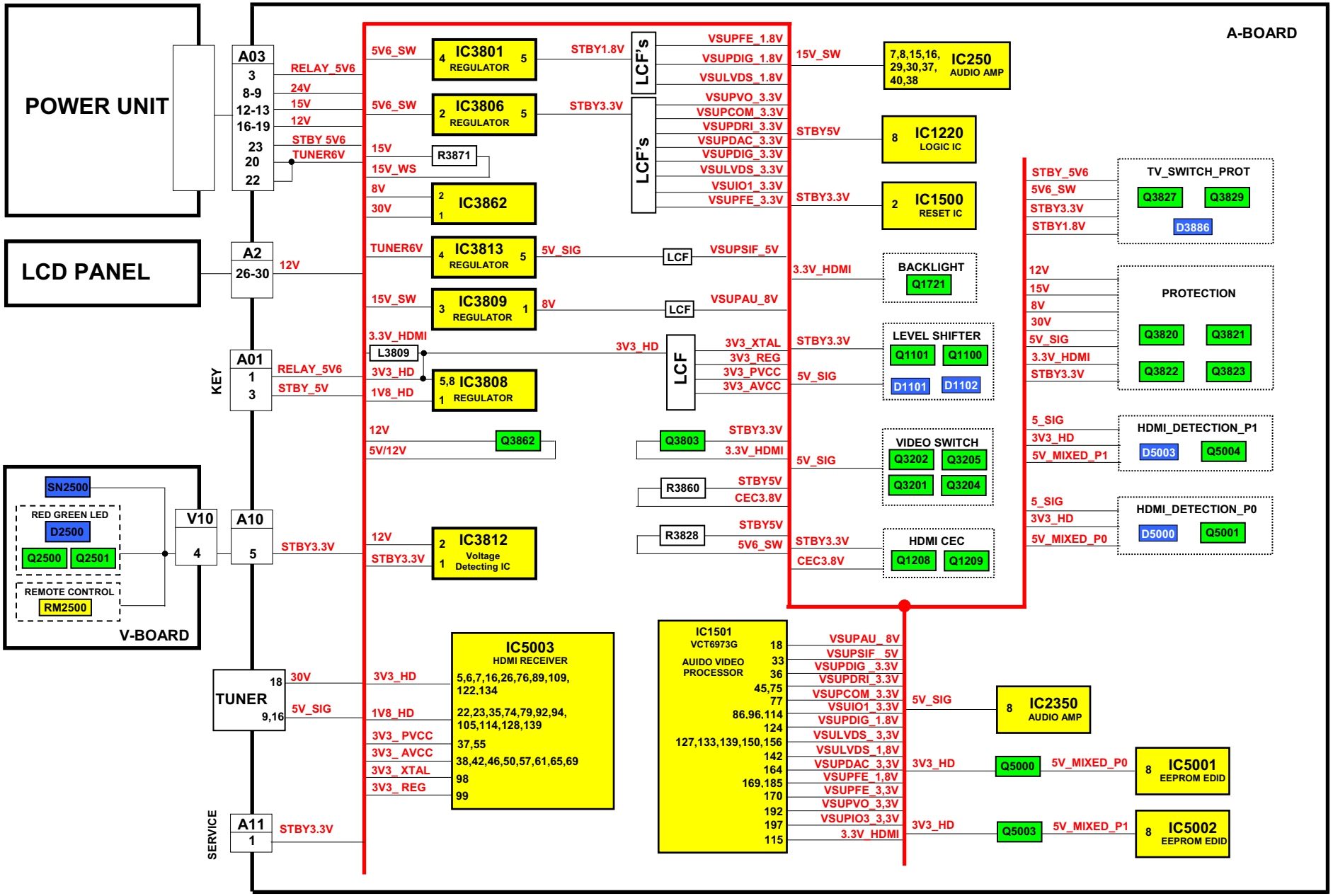Power Supply Block Diagram