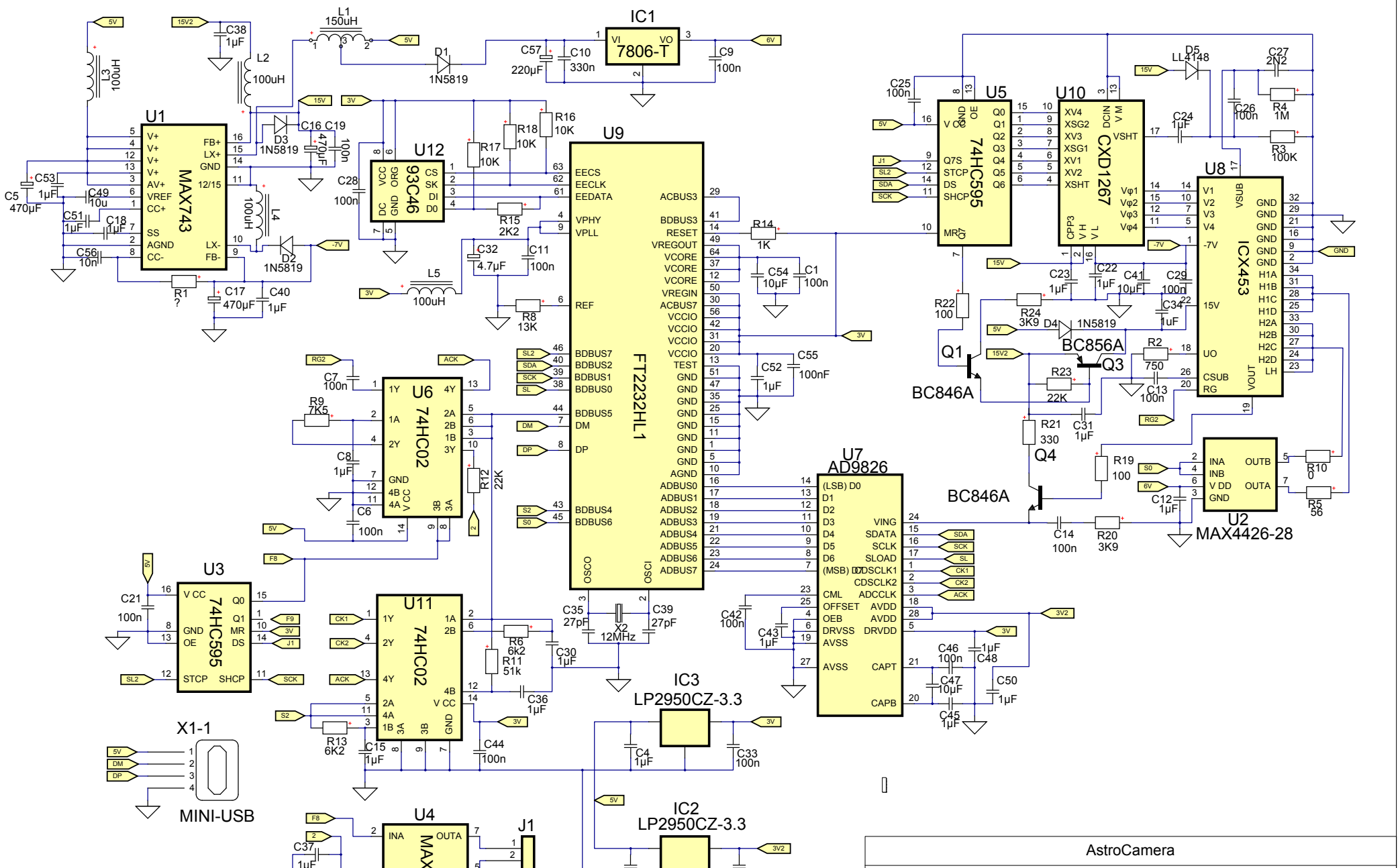

AstroCamera		
astroccd.org		
Designed by:	27 October 2013	
Checked by:	Doc. No:	Revision: 1
Approved by:	Sheet: Circuit	Size: A4