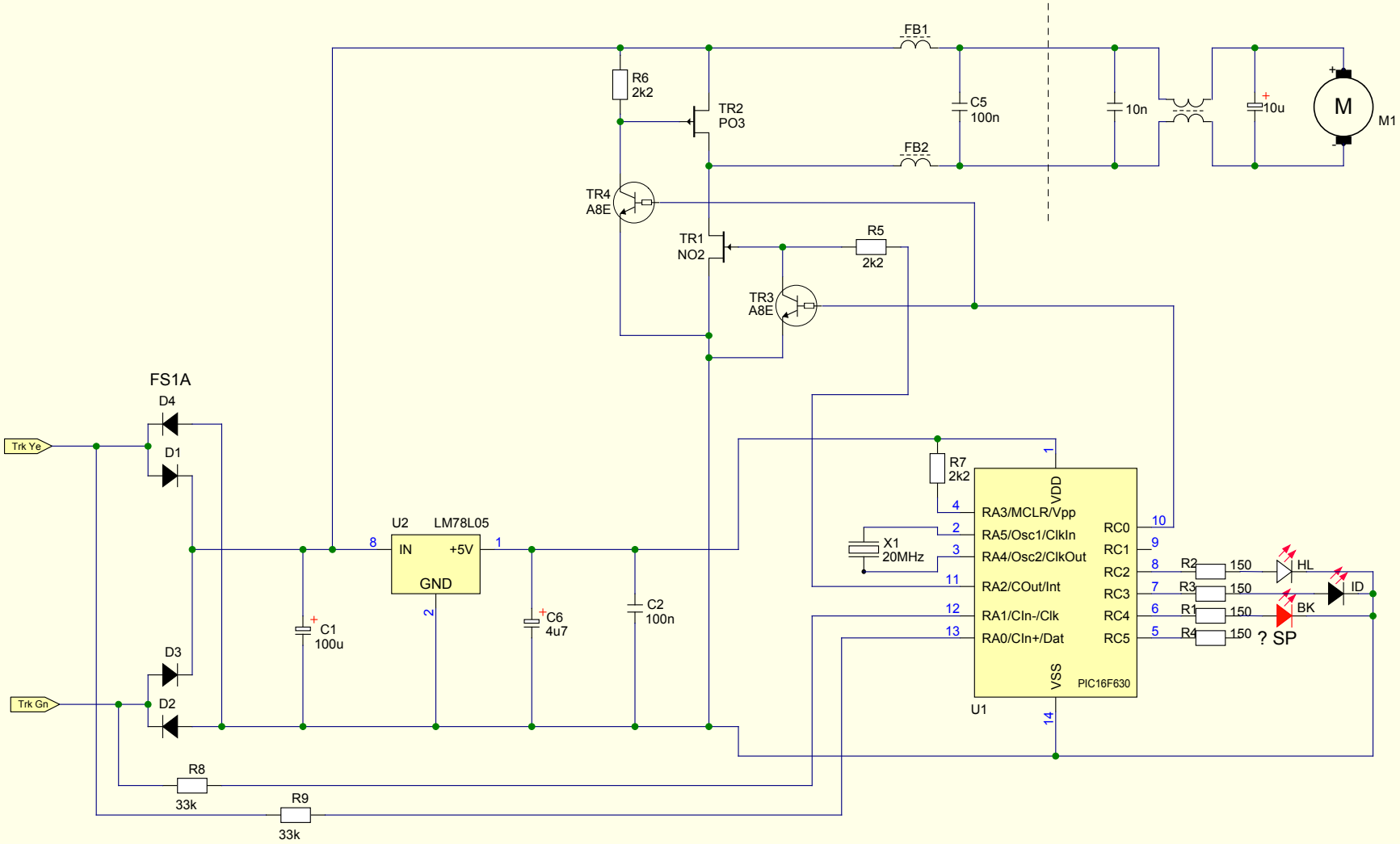

Title: Scalextric In Car 'chip' - Rev E		
Description: Copyright no doubt owned by Hornby		
Designed by: Ian Harding	Date: Tuesday, March 1, 2011	
Checked by: Rich Girling	Doc. No.: 1	Revision: 1.1
Approved by:	Sheet Schematic	Size: A