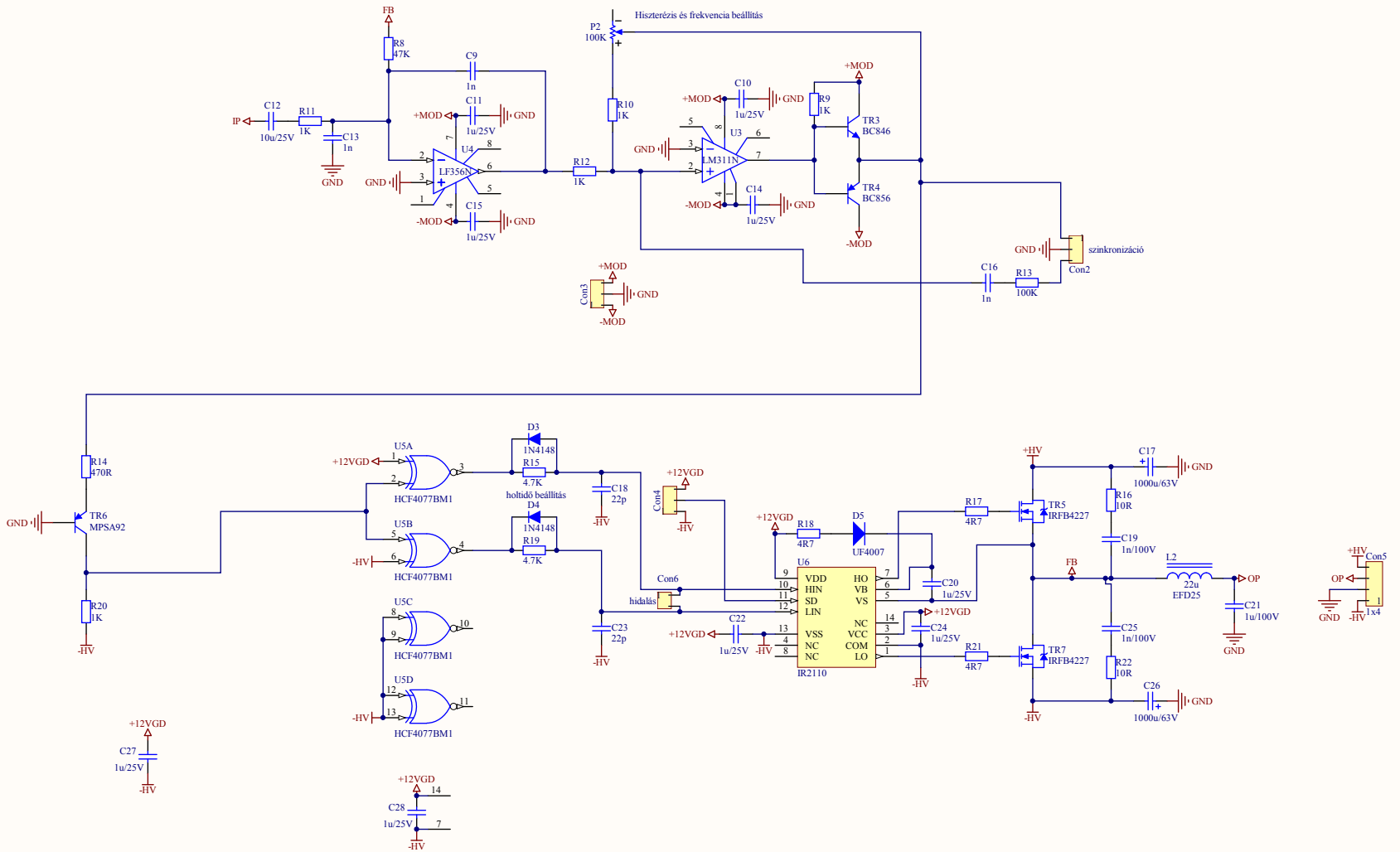

Title	Önrezgő Class-D végfok	
Size A3	Number V2.1	Revision
Date: 2014.09.11.		Sheet of
File: D:\elektronika\..\delta-sigma.SchDoc		Drawn By: External Solutions