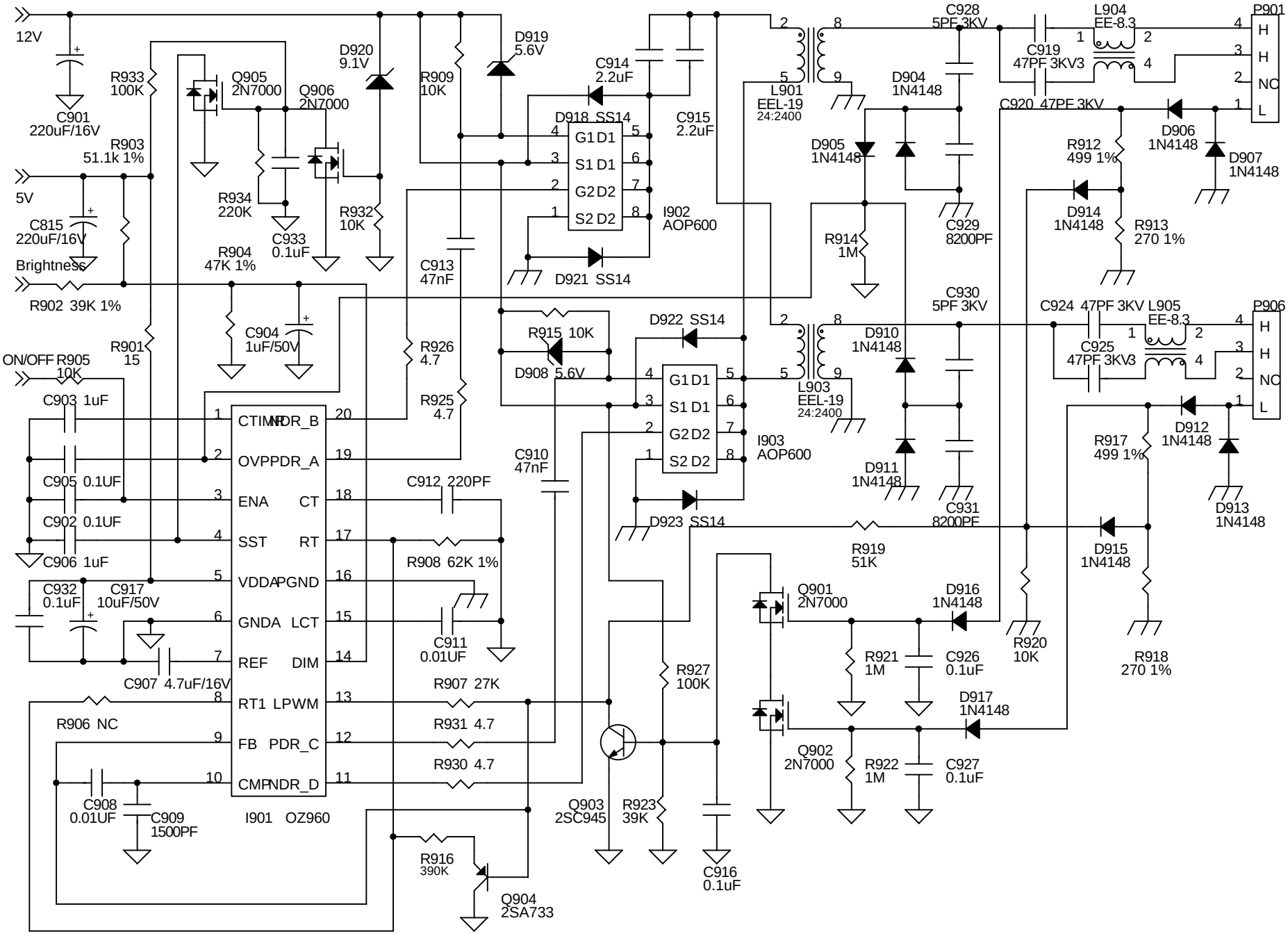Belinea 101705(111718) Inverter