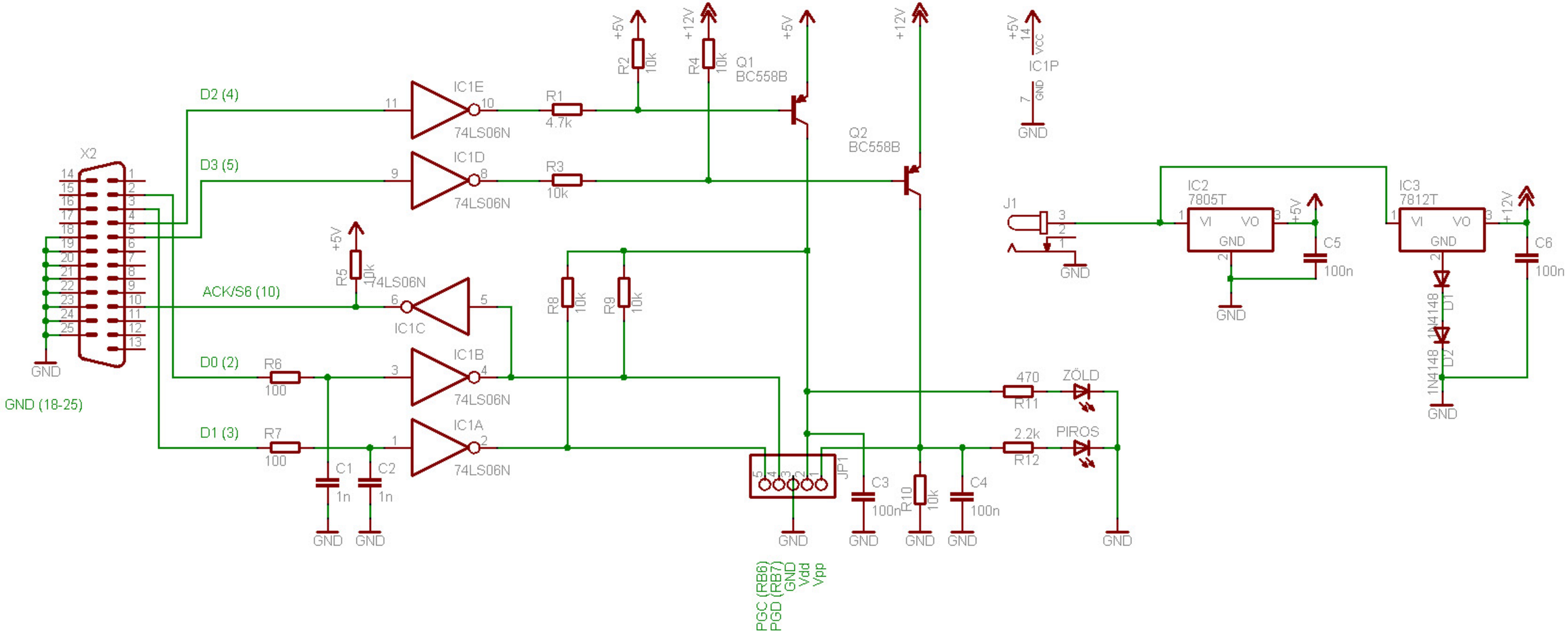
X2
D2 (4)
D3 (5)
ACK/S6 (10)
D0 (2)
D1 (3)
GND (18-25)
GND
IC1E
IC1D
IC1C
IC1B
IC1A
74LS06N
R1
4.7k
R2
10k
R3
10k
R4
10k
R5
10k
R6
100
R7
100
R8
10k
R9
10k
R10
10k
R11
470
R12
2.2k
C1
1n
C2
1n
C3
100n
C4
100n
C5
100n
C6
100n
Q1
BC558B
Q2
BC558B
+5V
+12V
IC1P
VCC
GND
J1
IC2
7805T
VI
VO
IC3
7812T
D1
1N4148
D2
1N4148
ZÖLD
PIROS
JP1
PGC (RB6)
PGD (RB7)
GND
Vdd
Vpp

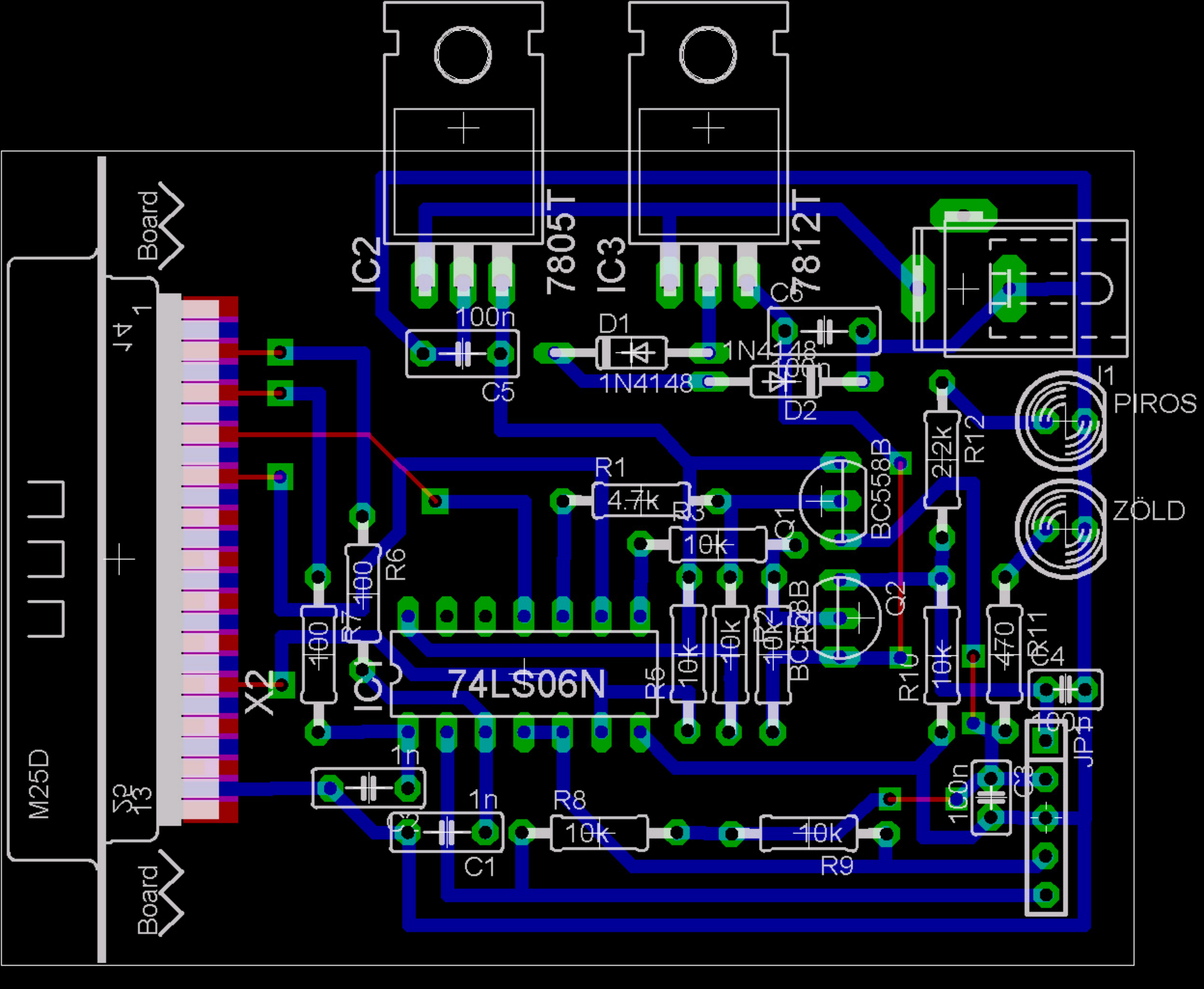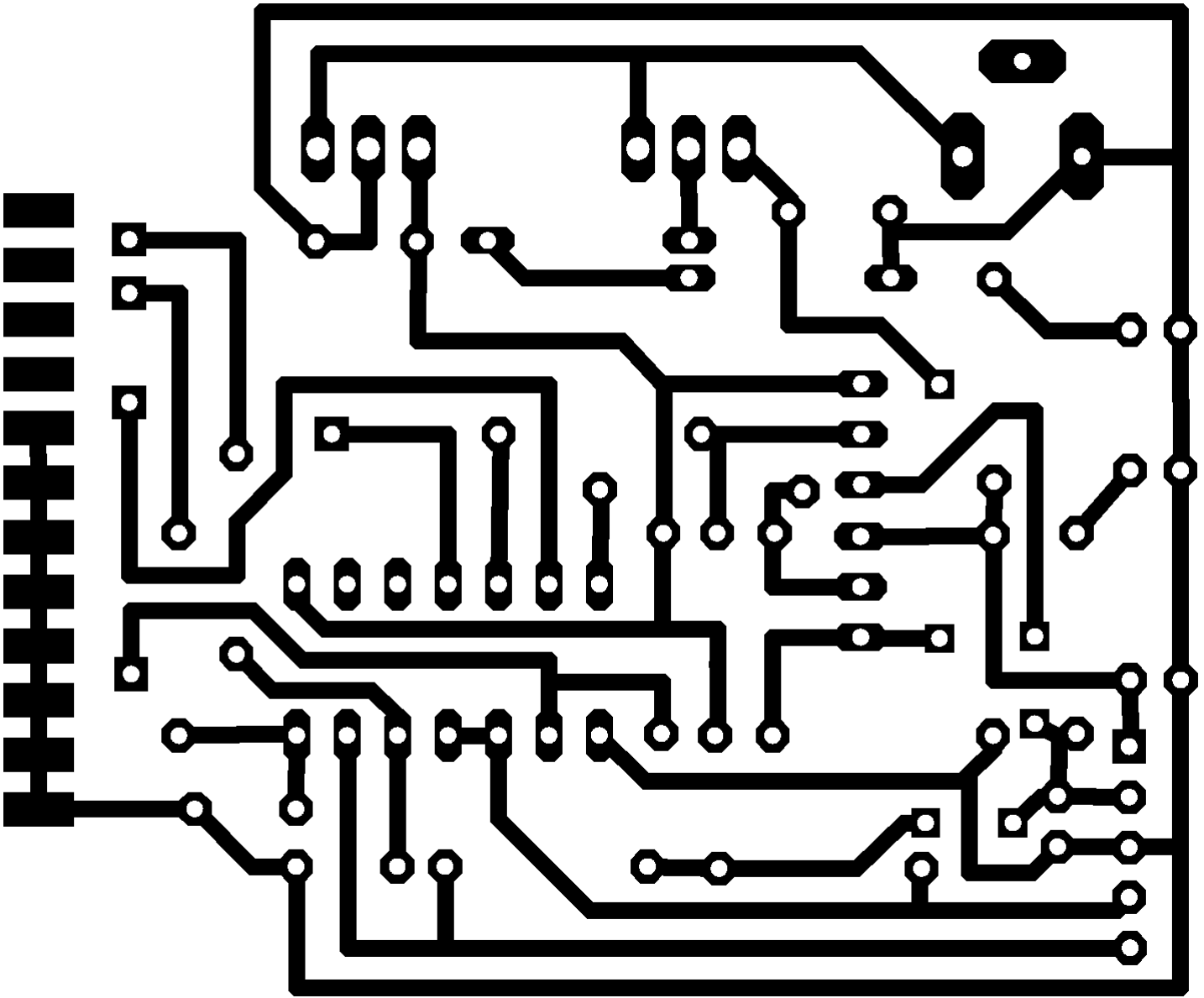
IC2
7805T
IC3
7812T
C5
100n
D1
1N4148
1N4148
C5
100n
D2
J1
PIROS
ZÖLD
R12
2k2
R1
4.7k
R3
10k
Q1
BC558B
Q2
BC558B
R6
100
R7
100
IC1
74LS06N
X2
R5
10k
R2
10k
R10
10k
R11
470
C4
100n
JP1
C3
100n
1n
C3
1n
C1
R8
10k
R9
10k
M25D
Board
Board