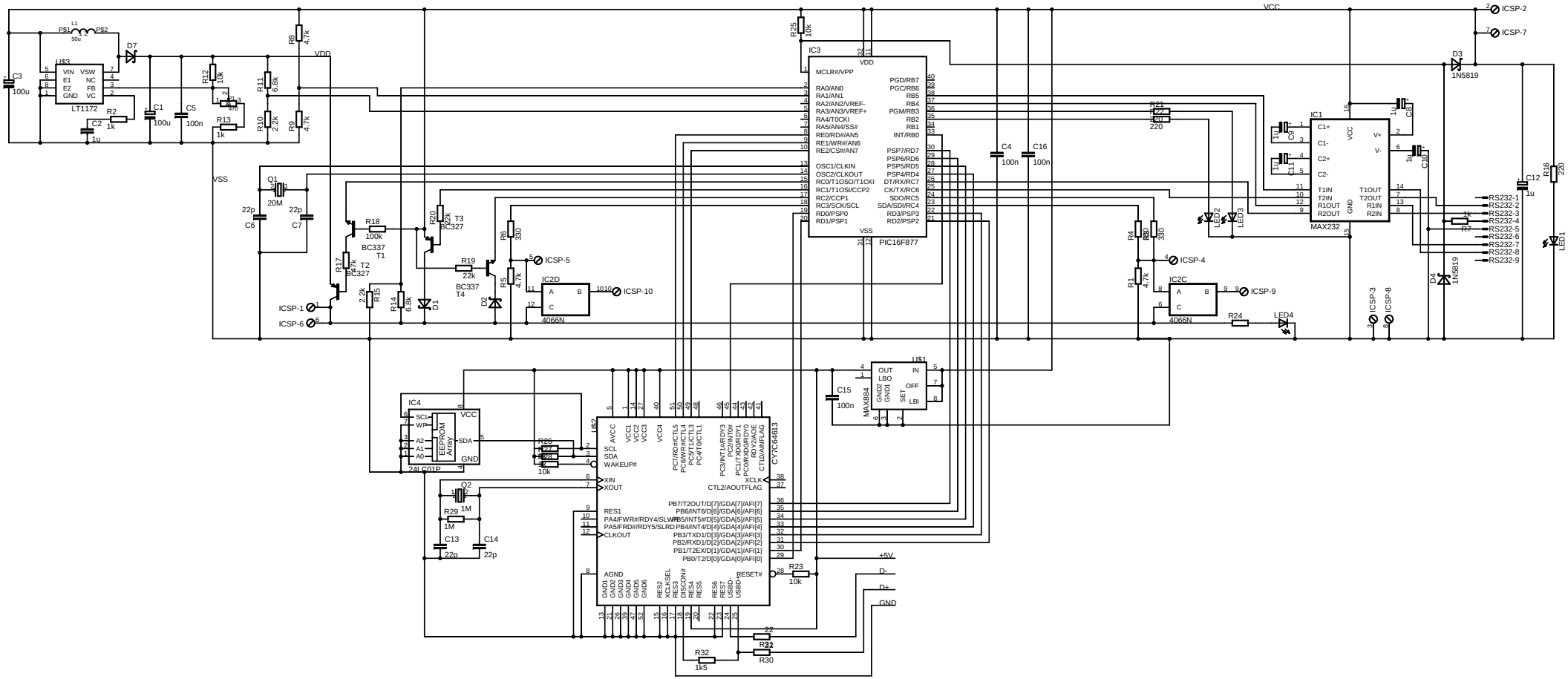
US3
LT1172
VIN VSW
E1 NC
E2 FB
GND VC
L1
PS1 PS2
50u
D7
C3 100u
C1 100u
C5 100n
C2 1u
R2 1k
R13 1k
R12 10k
R11 6.8k
R10 2.2k
R9 4.7k
R8 4.7k
VDD
VSS
Q1 20M
22p C6
22p C7
R18 100k
BC337 T1
R17 47k
BC327 T2
2.2k R15
R14 6.8k
D1
R20 22k
BC327 T3
R19 22k
BC337 T4
D2
R6 330
R5 4.7k
ICSP-1
ICSP-6
ICSP-5
IC2D
4066N
ICSP-10
R25 10k
IC3
VDD
MCLR#/VPP
RA0/AN0
RA1/AN1
RA2/AN2/VREF-
RA3/AN3/VREF+
RA4/T0CKI
RA5/AN4/SS#
RE0/RD#/AN5
RE1/WR#/AN6
RE2/CS#/AN7
OSC1/CLKIN
OSC2/CLKOUT
RC0/T1OSO/T1CKI
RC1/T1OSI/CCP2
RC2/CCP1
RC3/SCK/SCL
RD0/PSP0
RD1/PSP1
PGD/RB7
PGC/RB6
RB5
RB4
PGM/RB3
RB2
RB1
INT/RB0
PSP7/RD7
PSP6/RD6
PSP5/RD5
PSP4/RD4
DT/RX/RC7
CK/TX/RC6
SDO/RC5
SDA/SDI/RC4
RD3/PSP3
RD2/PSP2
VSS
PIC16F877
C4 100n
C16 100n
R21 220
R22 220
R4 330
R3 330
R1 4.7k
IC2C
4066N
ICSP-4
ICSP-9
R24
LED4
LED2
LED3
VCC
ICSP-2
ICSP-7
D3 1N5819
IC1
MAX232
C1+
C1-
C2+
C2-
T1IN
T2IN
R1OUT
R2OUT
VCC
GND
V+
V-
T1OUT
T2OUT
R1IN
R2IN
C9 1u
C11 1u
C8 1u
C10 1u
R7 1k
D4 1N5819
C12 1u
R16 220
LED1
RS232-1
RS232-2
RS232-3
RS232-4
RS232-5
RS232-6
RS232-7
RS232-8
RS232-9
ICSP-3
ICSP-8
US1
MAX884
OUT
LBO
GND2
GND1
SET
IN
OFF
LBI
C15 100n
IC4
24LC01P
SCL
WP
A2
A1
A0
VCC
SDA
GND
EEPROM Array
R26 10k
IC2
CY7C64813
AVCC
VCC1
VCC2
VCC3
VCC4
SCL
SDA
WAKEUP#
XIN
XOUT
RES1
PA4/FWR#/RDY4/SLWR
PA5/FRD#/RDY5/SLRD
CLKOUT
AGND
GND1
GND2
GND3
GND4
GND5
GND6
RESET#
XCLK
CTL2/AOUTFLAG
Q2 12
R29 1M
1M
C13 22p
C14 22p
R23 10k
R32 1k5
R30
+5V
D-
D+
GND