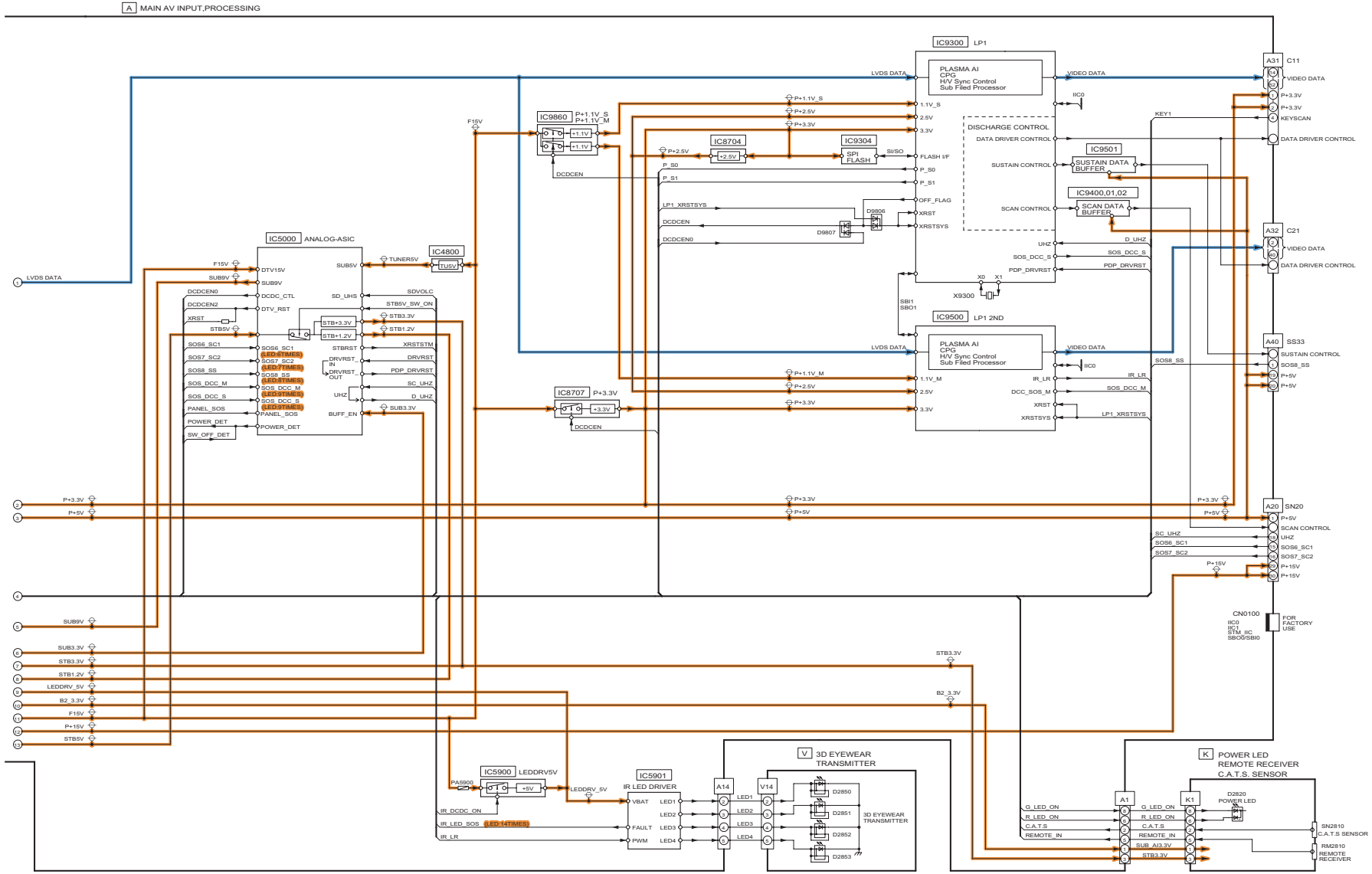10.3. Block (2/4) Diagram