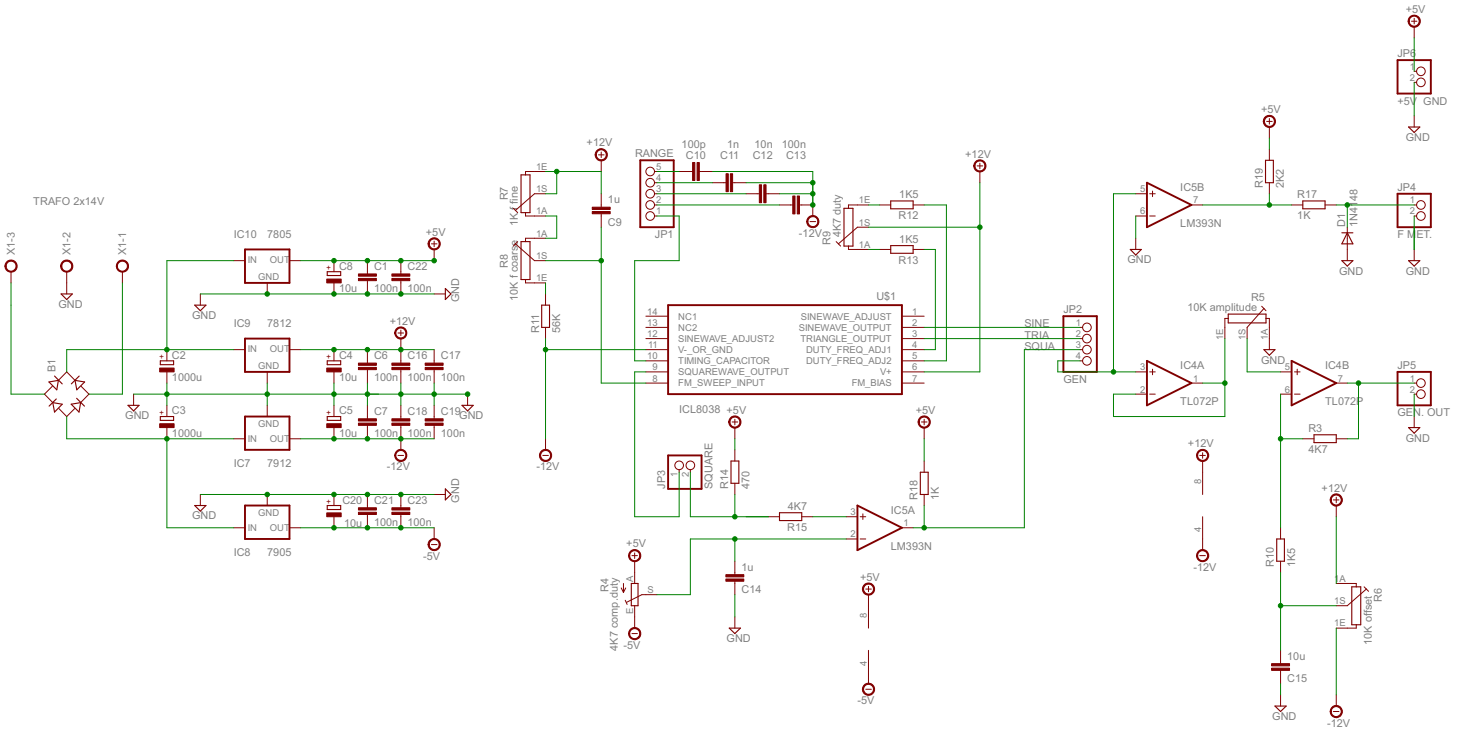
TRAFO 2x14V
X1-3
X1-2
X1-1
GND
B1
C2
1000u
C3
1000u
IC10 7805
IC9 7812
IC7 7912
IC8 7905
IN OUT
GND
C8
C1
C22
C4
C6
C16
C17
C5
C7
C18
C19
C20
C21
C23
10u
100n
+5V
+12V
-12V
-5V
R7
1K fine
R8
10K coarse
R11
56K
1u
C9
RANGE
JP1
100p C10
1n C11
10n C12
100n C13
R9
4K7 duty
R12
1K5
R13
1K5
U$1
NC1
NC2
SINEWAVE_ADJUST2
V-_OR_GND
TIMING_CAPACITOR
SQUAREWAVE_OUTPUT
FM_SWEEP_INPUT
SINEWAVE_ADJUST
SINEWAVE_OUTPUT
TRIANGLE_OUTPUT
DUTY_FREQ_ADJ1
DUTY_FREQ_ADJ2
V+
FM_BIAS
ICL8038
JP3
SQUARE
R14
470
4K7
R15
IC5A
LM393N
R18
1K
R4
4K7 comp.duty
C14
JP2
SINE
TRIA
SQUA
GEN
IC5B
LM393N
R19
2K2
R17
1K
D1
1N4148
JP4
F MET.
R5
10K amplitude
IC4A
TL072P
IC4B
TL072P
JP5
GEN. OUT
R3
4K7
R10
1K5
C15
10u
R6
10K offset
JP6