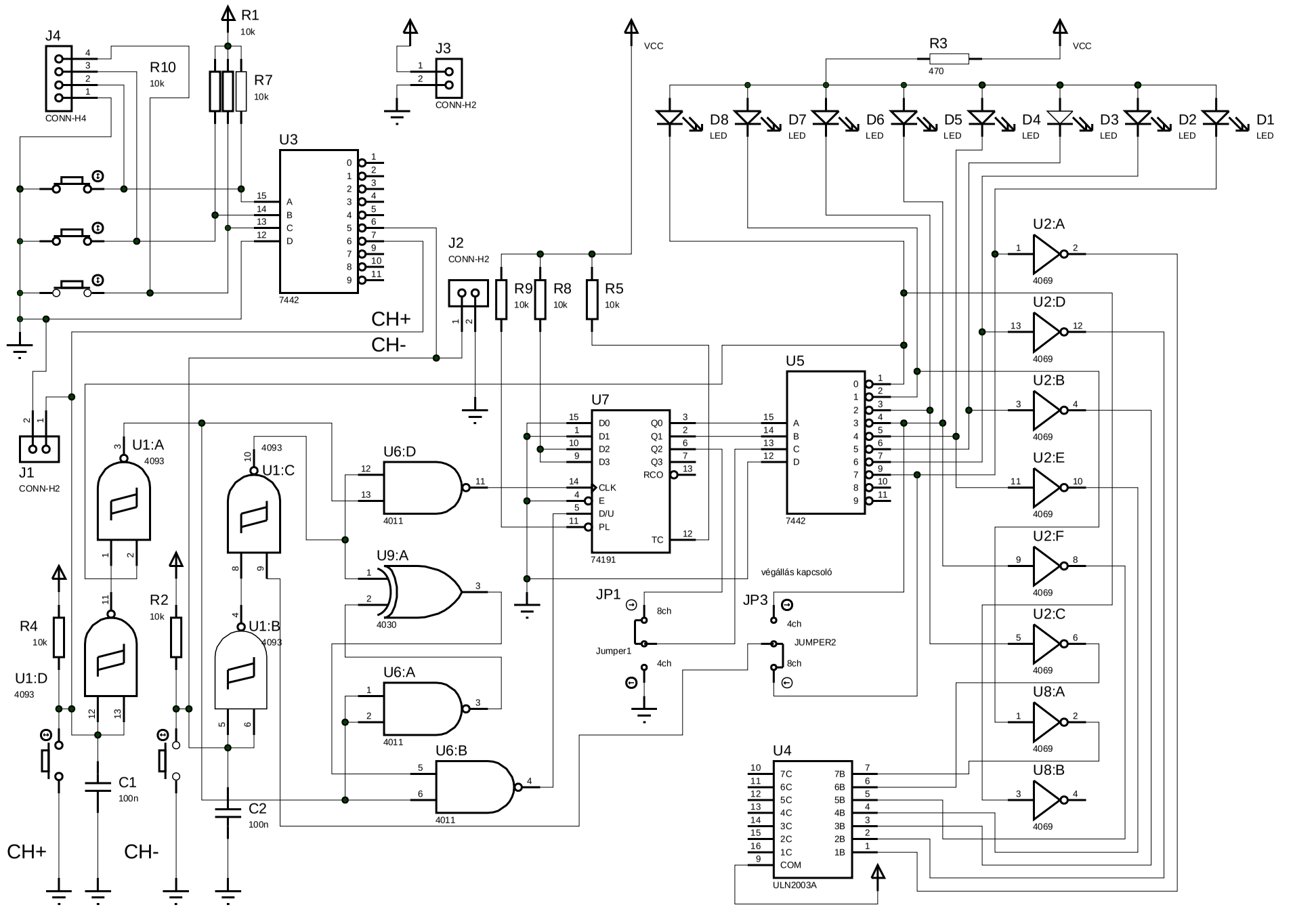
J4
CONN-H4
R10
10k
R1
10k
R7
10k
J3
CONN-H2
VCC
R3
470
VCC
D8
LED
D7
LED
D6
LED
D5
LED
D4
LED
D3
LED
D2
LED
D1
LED
U3
7442
J2
CONN-H2
R9
10k
R8
10k
R5
10k
CH+
CH-
J1
CONN-H2
U1:A
4093
U1:C
4093
U6:D
4011
U7
74191
U5
7442
U2:A
4069
U2:D
4069
U2:B
4069
U2:E
4069
U2:F
4069
U2:C
4069
U8:A
4069
U8:B
4069
U9:A
4030
végállás kapcsoló
JP1
8ch
Jumper1
4ch
JP3
4ch
JUMPER2
8ch
R4
10k
R2
10k
U1:D
4093
U1:B
4093
U6:A
4011
U6:B
4011
C1
100n
C2
100n
CH+
CH-
U4
ULN2003A