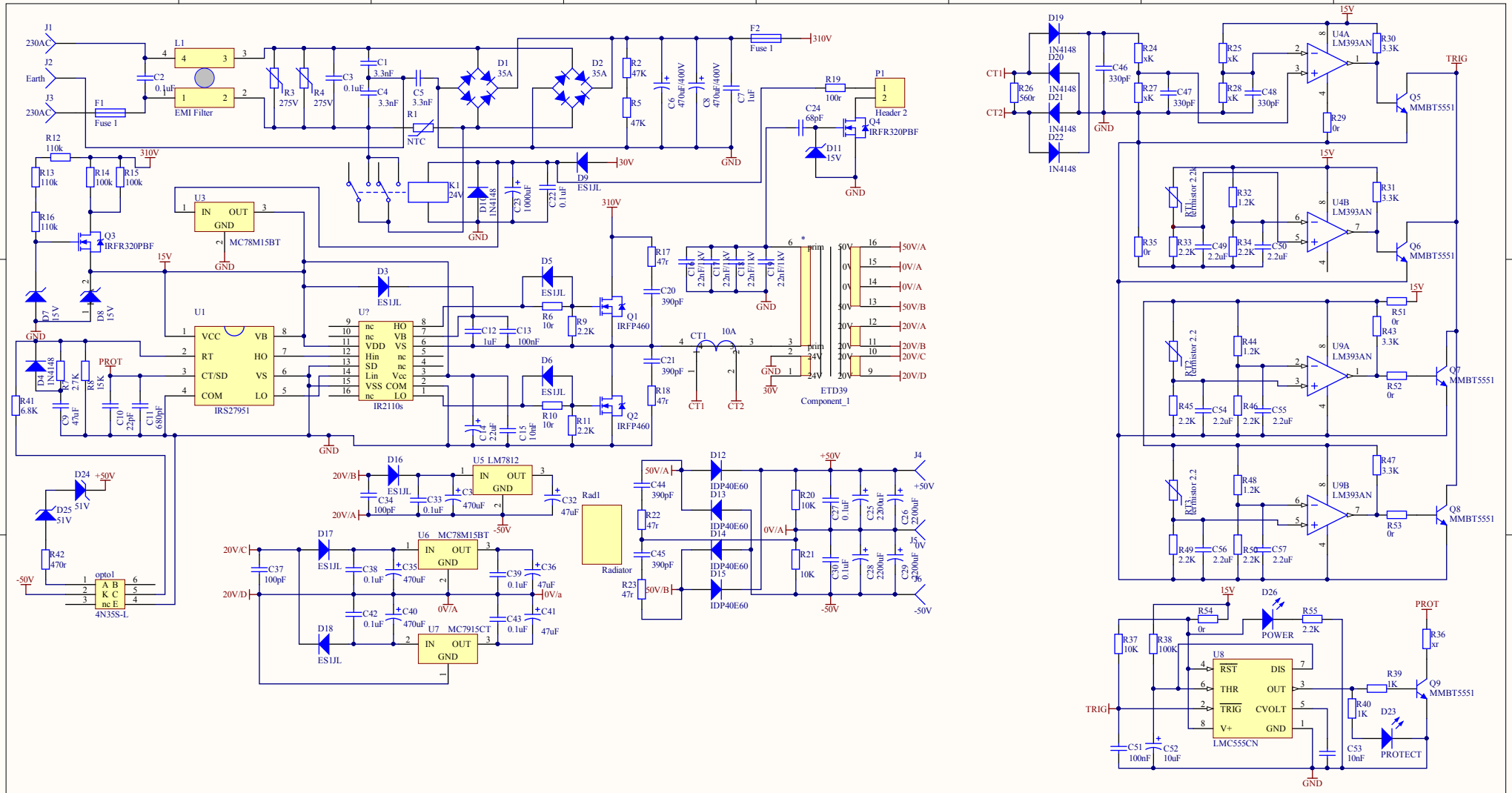

Title		
Size A3	Number	Revision
Date: 1/29/2016		Sheet of
File: C:\Users\...\resonant smps 800W.SchDoc		Drawn By: