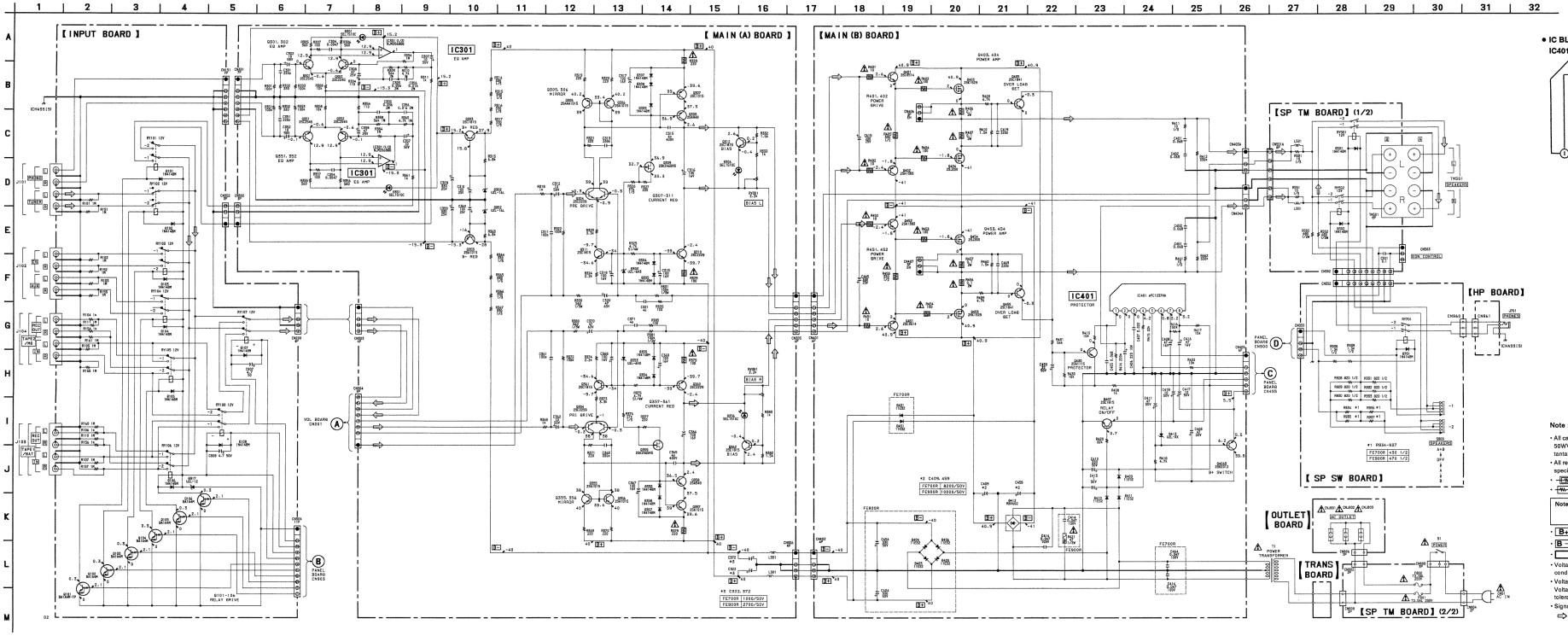

● IC BLOCK DIAGRAM – MAIN SECTION –

IC401 μPC1237HA

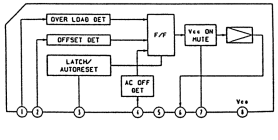

Note :

- All capacitors are in μ F unless otherwise noted. pF: μ μ F 50WV or less are not indicated except for electrolytics and tantalums.
- All resistors are in Ω and ¼W or less unless otherwise specified.
- : nonflammable resistor.
- : fusible resistor.

Note : The components identified by mark ⚠ or dotted line with mark ⚠ are critical for safety. Replace only with part number specified.

- B+ : B+ Line
- B− : B − Line
- : adjustment for repair.
- Voltage is dc with respect to ground under no-signal conditions.
- Voltages are taken with a VOM (Input impedance 10M Ω). Voltage variations may be noted due to normal production tolerances.
- Signal path.