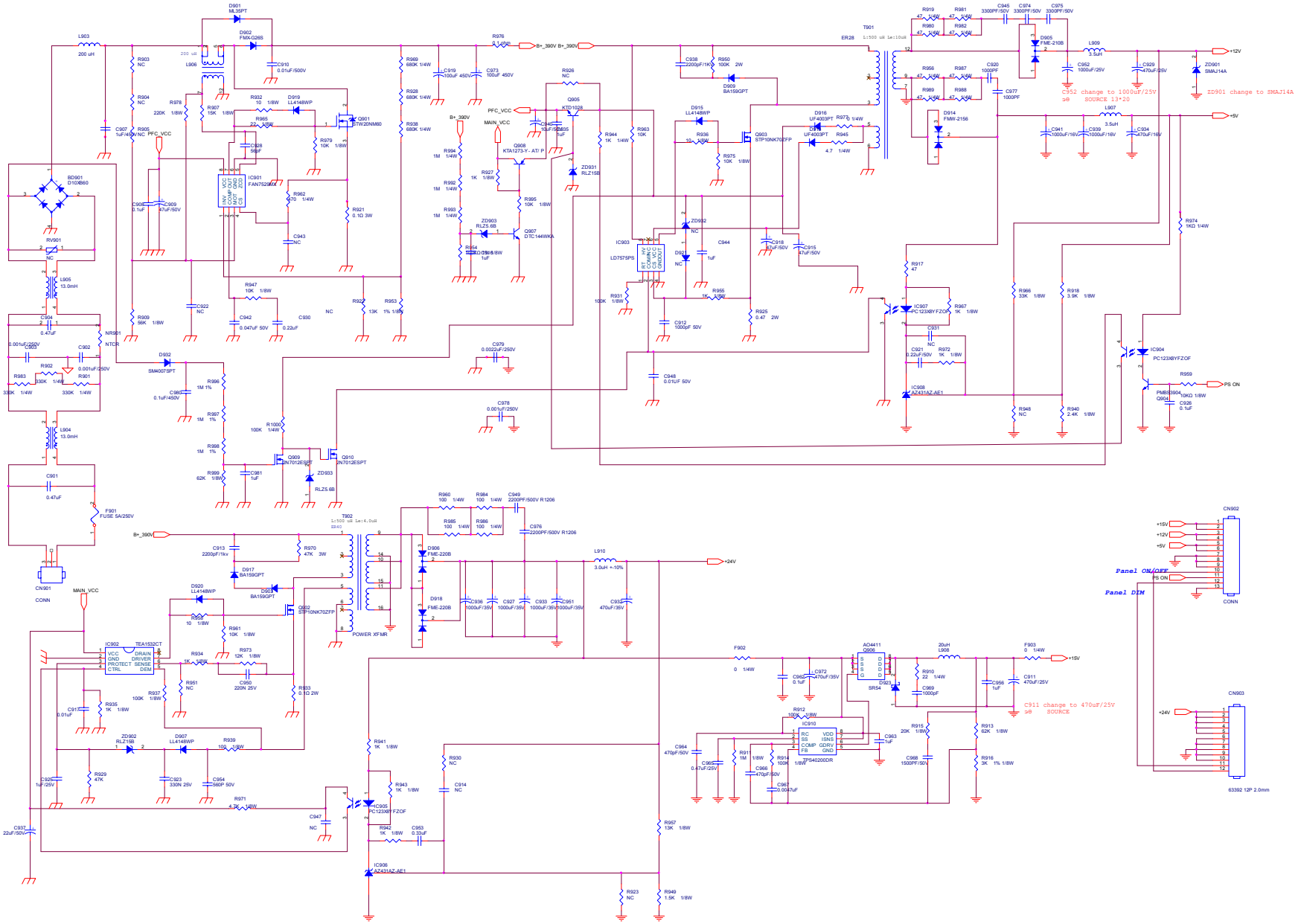
C952 change to 1000uF/25V
SOURCE 13*20
ZD901 change to SMAJ14A
C911 change to 470uF/25V
SOURCE
Panel ON/OFF
Panel DIM
POWER XFMR
63392 12P 2.0mm