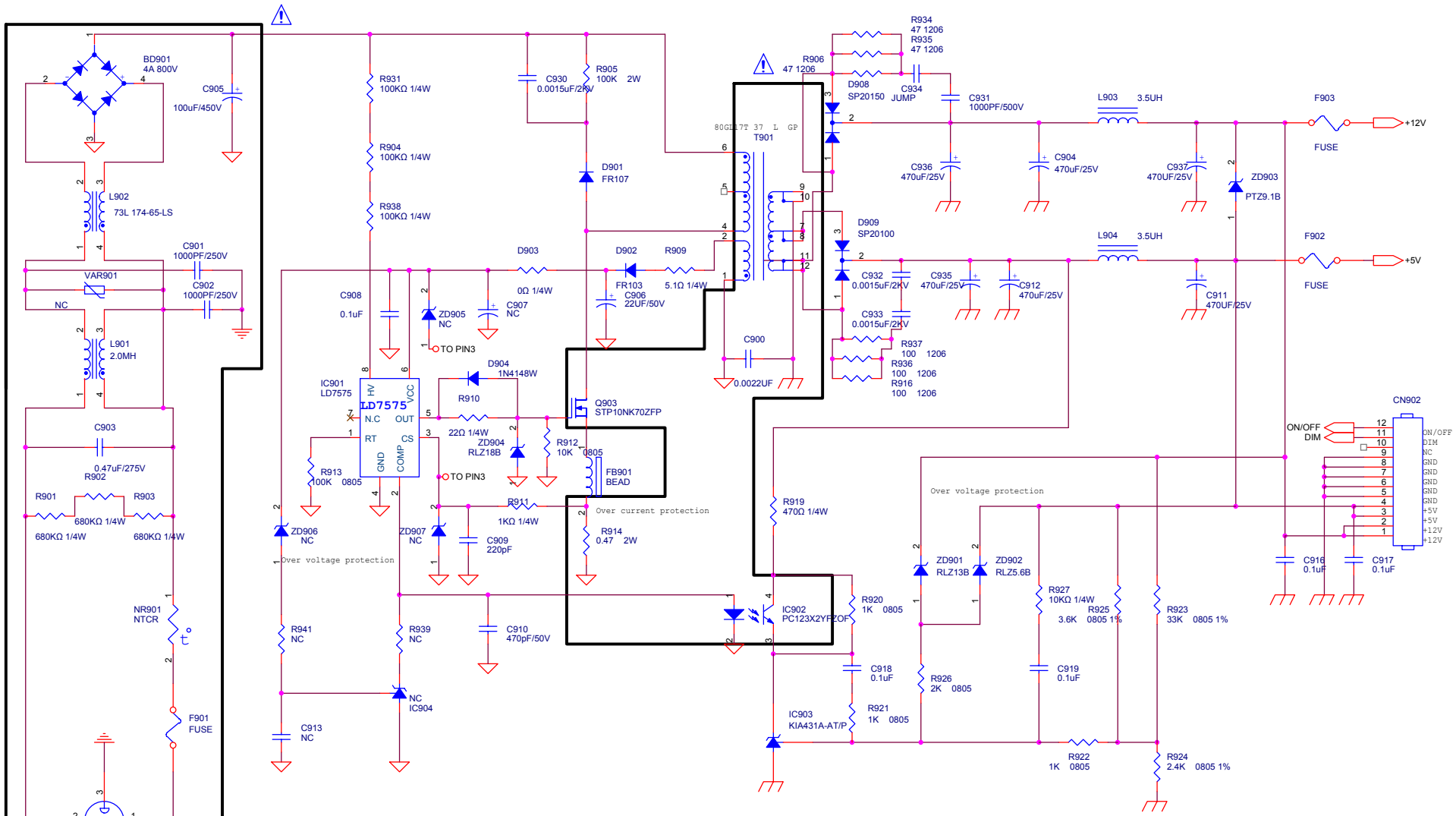

AOC (Top Victory) Electronics Co., Ltd.		
Title	1.POWER OUTPUT 12V & 5 V	
Size	Document Number 715G1899 1 HP	Rev 1
Date: Friday, July 21, 2006	Sheet 1 of 1	

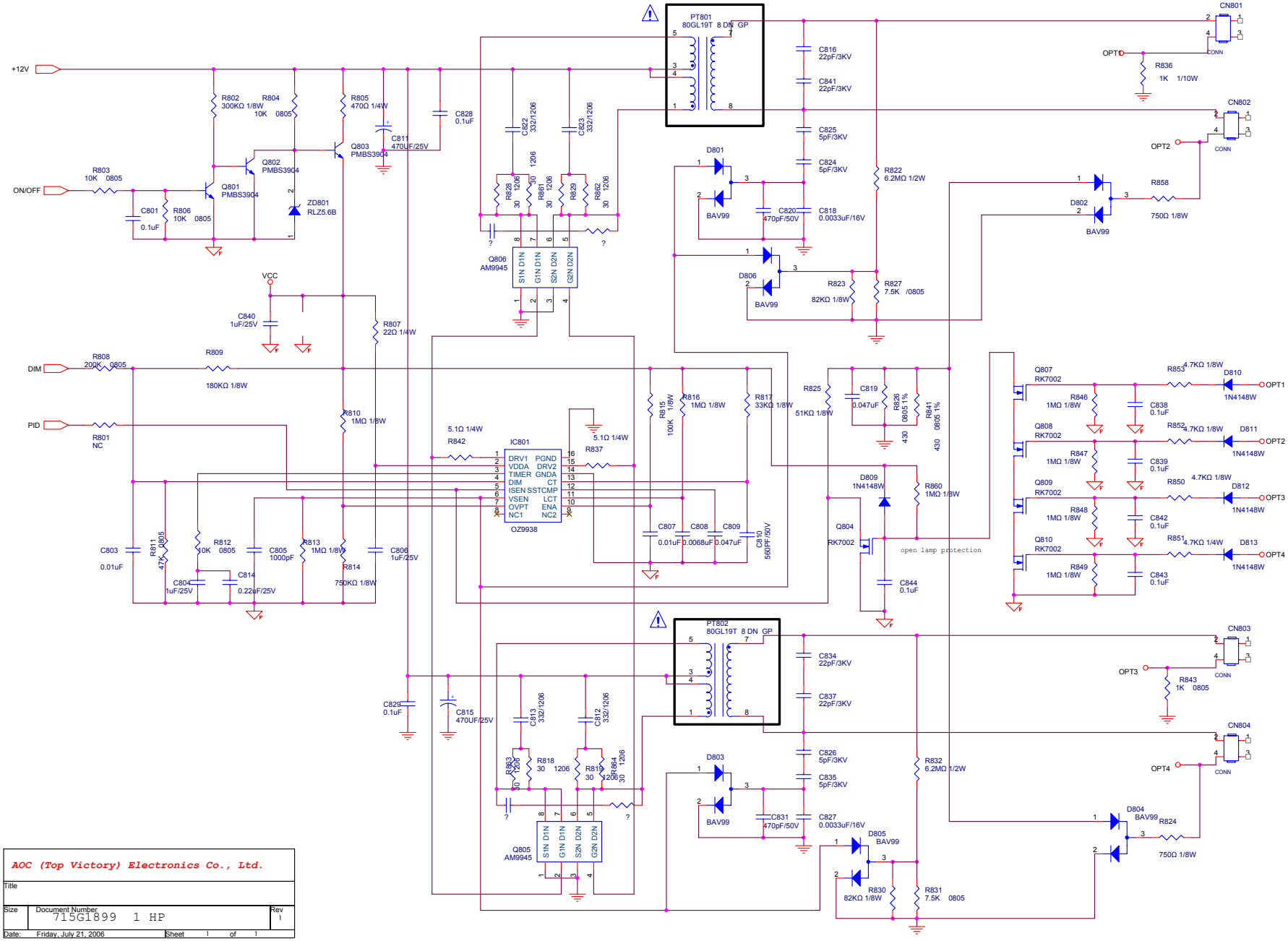

AOC (Top Victory) Electronics Co., Ltd.		
Title		
Size	Document Number 715G1899 1 HP	Rev 1
Date: Friday, July 21, 2006	Sheet 1 of 1	