kukac20010911@freemail.hu

Ki 6/75 — III/6/50 4 175 (28)

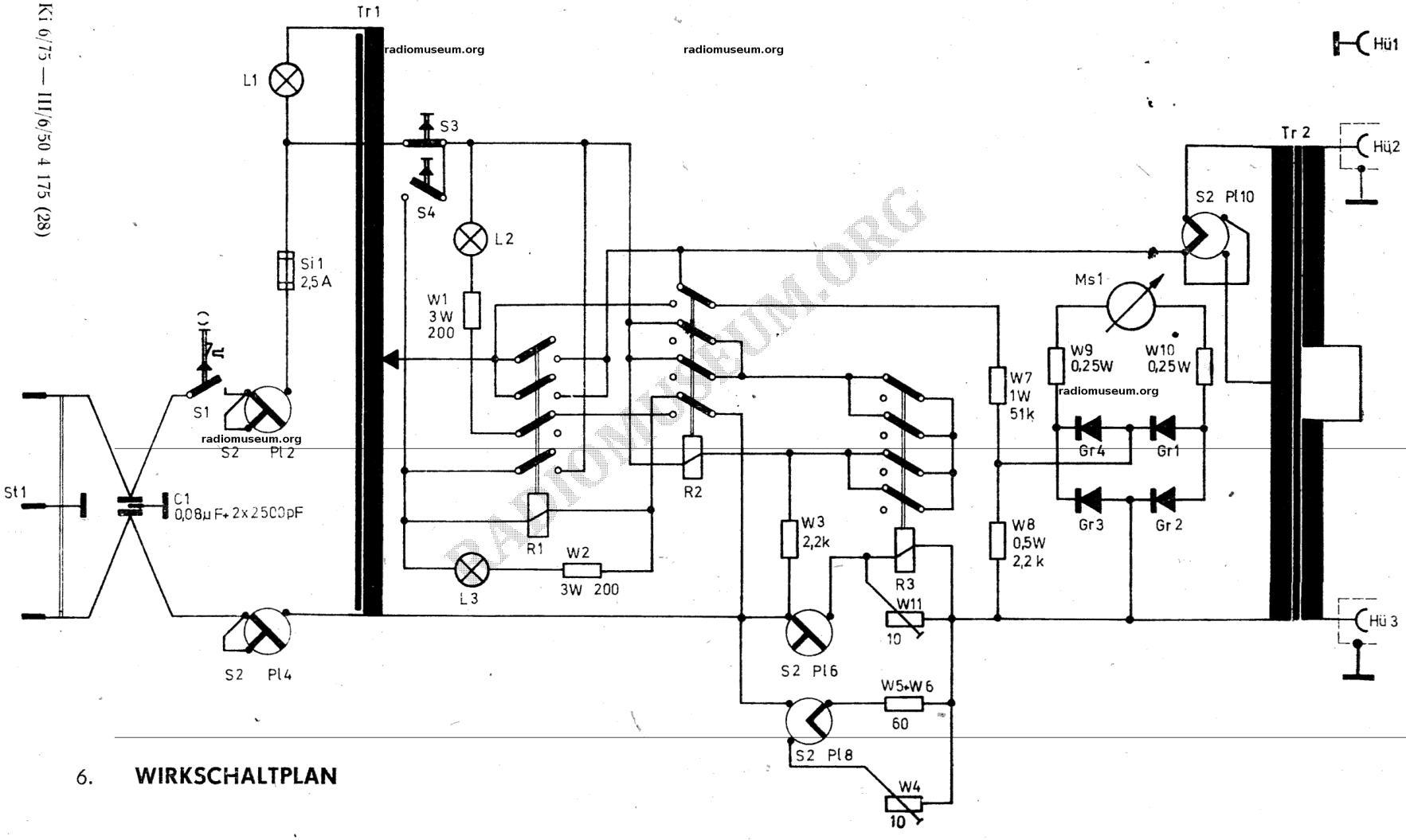

6. **WIRKSCHALTPLAN**

www.radiomuseum.org; upload by Holger Drechsel; download by kukac kukac Mon Dec 05 19:53:40 CET 2016 [2847 x 2016, 265kb]