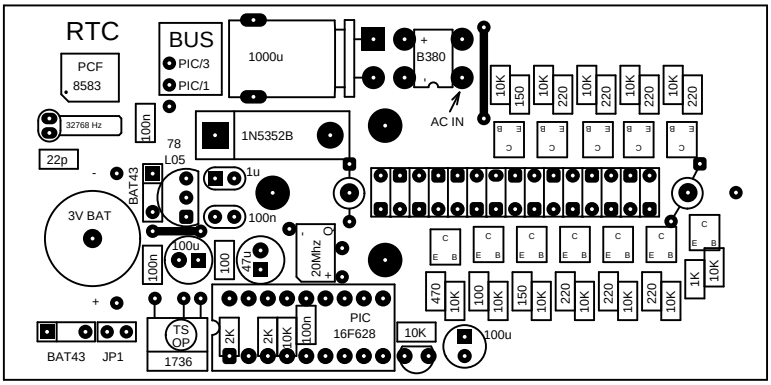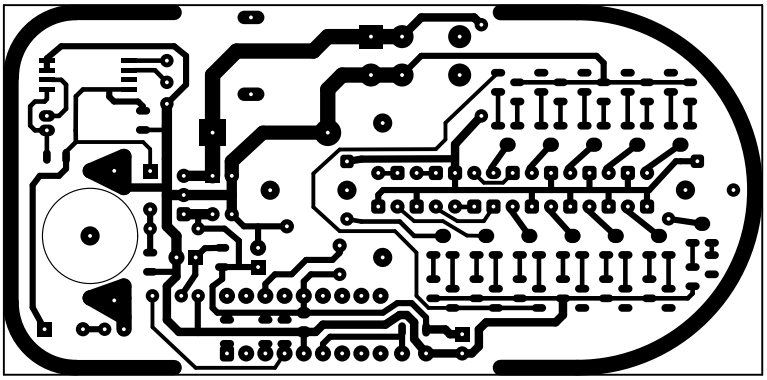
RTC
PCF
8583
BUS
PIC/3
PIC/1
1000u
B380
AC IN
10K
150
10K
220
10K
220
10K
220
10K
220
32768 Hz
100n
78
L05
1N5352B
22p
BAT43
1u
3V BAT
100n
100u
100
47u
20Mhz
470
10K
100
10K
150
10K
220
10K
220
10K
220
10K
1K
10K
100n
PIC
16F628
BAT43
JP1
TS
OP
1736
2K
2K
10K
100n
10K
100u