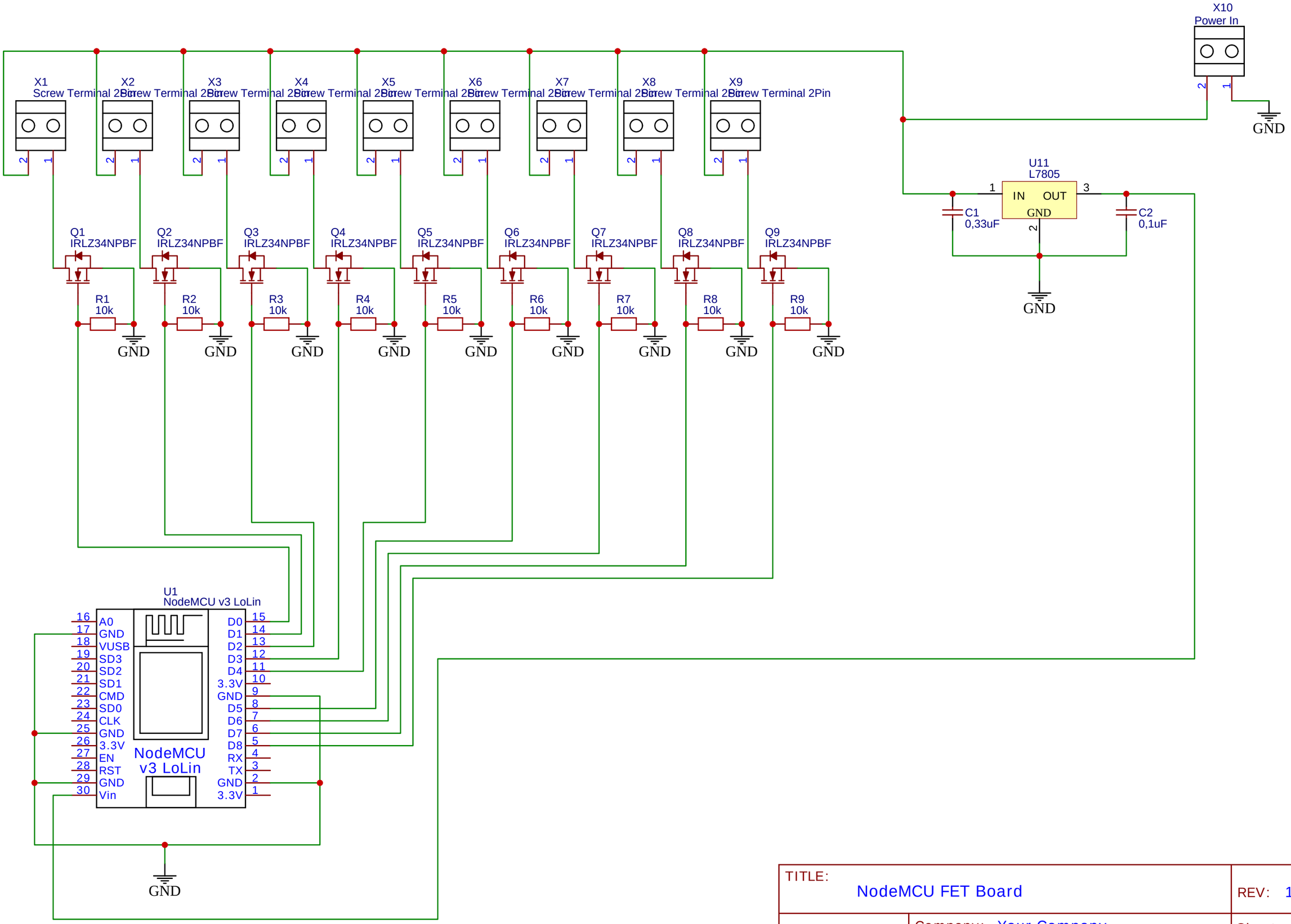

TITLE: NodeMCU FET Board		REV: 1.0
EasyEDA	Company: Your Company	Sheet: 1/1
	Date: 2019-11-16 Drawn By: SwissAirplane	