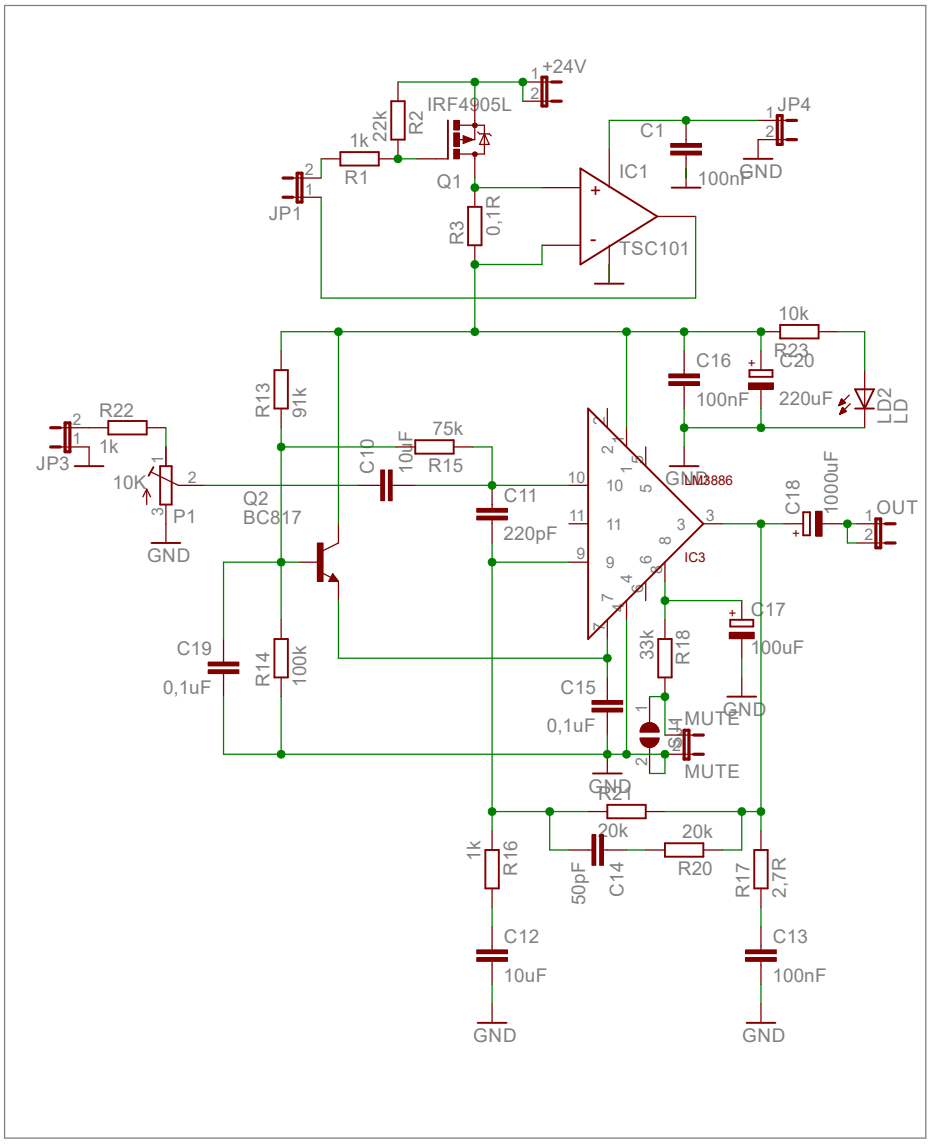

2020. 04. 30. 12:32:51 C:\Users\Sferi\Downloads\AMP_v40W_3.sch (Sheet: 1/1)