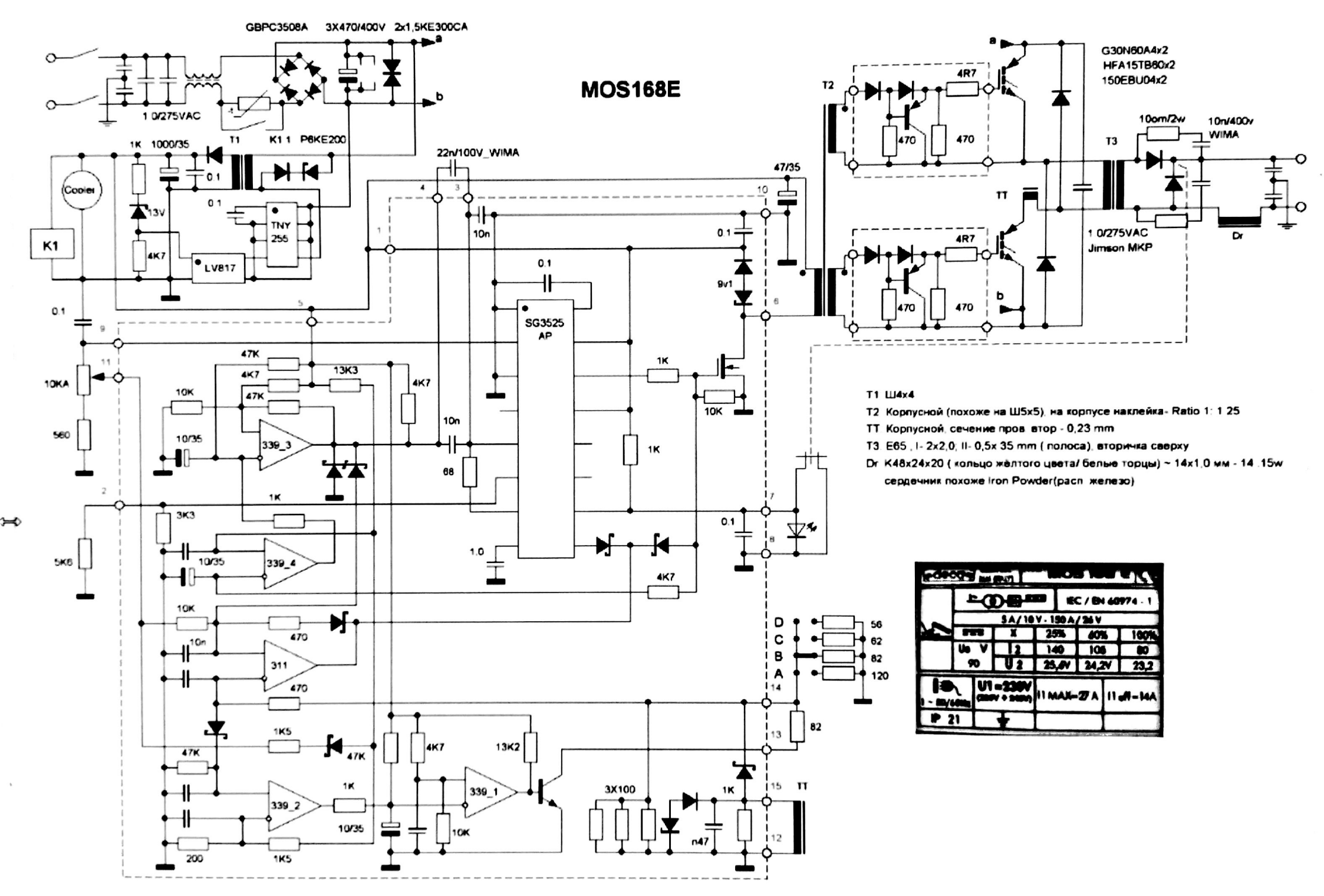

Generated by CamScanner